MVME2300-Series VME Processor Module Programmer's Reference Guide

V2300A/PG1

Notice

While reasonable efforts have been made to assure the accuracy of this document, Motorola, Inc. assumes no liability resulting from any omissions in this document, or from the use of the information obtained therein. Motorola reserves the right to revise this document and to make changes from time to time in the content hereof without obligation of Motorola to notify any person of such revision or changes.

No part of this material may be reproduced or copied in any tangible medium, or stored in a retrieval system, or transmitted in any form, or by any means, radio, electronic, mechanical, photocopying, recording or facsimile, or otherwise, without the prior written permission of Motorola, Inc.

It is possible that this publication may contain reference to, or information about Motorola products (machines and programs), programming, or services that are not announced in your country. Such references or information must not be construed to mean that Motorola intends to announce such Motorola products, programming, or services in your country.

Restricted Rights Legend

If the documentation contained herein is supplied, directly or indirectly, to the U.S. Government, the following notice shall apply unless otherwise agreed to in writing by Motorola, Inc.

Use, duplication, or disclosure by the Government is subject to restrictions as set forth in subparagraph (c)(1)(ii) of the Rights in Technical Data and Computer Software clause at DFARS 252.227-7013.

Motorola, Inc.
Computer Group
2900 South Diablo Way
Tempe, Arizona 85282

Preface

The *MVME2300-Series VME Processor Module Programmer's Reference Guide* provides brief board level information, complete memory maps, and detailed ASIC chip information including register bit descriptions for the MVME2300 series VME Processor Modules (also called MVME230x in this manual). The information contained in this manual applies to the single board computers built from some of the plug-together components listed in the following table.

Model	MPC	Memory
MVME2301	MPC603 @ 200 MHz	16MB ECC DRAM
MVME2302		32MB ECC DRAM
MVME2303		64MB ECC DRAM
MVME2304		128MB ECC DRAM
MVME2305	MPC604 @ 300 MHz	16MB ECC DRAM
MVME2306		32MB ECC DRAM
MVME2307		64MB ECC DRAM
MVME2308		128MB ECC DRAM

This manual is intended for anyone who wants to program these boards in order to design OEM systems, supply additional capability to an existing compatible system, or work in a lab environment for experimental purposes.

A basic knowledge of computers and digital logic is assumed.

To use this manual, you should be familiar with the publications listed in *Appendix A, Related Documentation*.

The following conventions are used in this document:

bold
: is used for user input that you type just as it appears. Bold is also used for commands, options and arguments to commands, and names of programs, directories, and files.

italic
: is used for names of variables to which you assign values. Italic is also used for comments in screen displays and examples.

`courier`
: is used for system output (e.g., screen displays, reports), examples, and system prompts.

<RETURN> or **<CR>**
: represents the carriage return or enter key.

CTRL

represents the Control key. Execute control characters by pressing the **CTRL** key and the letter simultaneously, e.g., **CTRL-d**.

The computer programs stored in the Read Only Memory of this device contain material copyrighted by Motorola Inc., first published 1990, and may be used only under a license such as the License for Computer Programs (Article 14) contained in Motorola's Terms and Conditions of Sale, Rev. 1/79.

All Motorola PWBs (printed wiring boards) are manufactured by UL-recognized manufacturers, with a flammability rating of 94V-0.

WARNING

This equipment generates, uses, and can radiate electromagnetic energy. It may cause or be susceptible to electromagnetic interference (EMI) if not installed and used in a cabinet with adequate EMI protection.

Motorola® and the Motorola symbol are registered trademarks of Motorola, Inc.

PowerStack™, VMEmodule™, and VMEsystem™ are trademarks of Motorola, Inc.

PowerPC™, PowerPC 603™, and PowerPC 604™are trademarks of IBM Corp, and are used by Motorola, Inc. under license from IBM Corp.

AIX™ is a trademark of IBM Corp.

Timekeeper™ and Zeropower™ are trademarks of Thompson Components.

All other products mentioned in this document are trademarks or registered trademarks of their respective holders.

©Copyright Motorola 1997

All Rights Reserved

Printed in the United States of America

October 1997

Safety Summary
Safety Depends On You

The following general safety precautions must be observed during all phases of operation, service, and repair of this equipment. Failure to comply with these precautions or with specific warnings elsewhere in this manual violates safety standards of design, manufacture, and intended use of the equipment. Motorola, Inc. assumes no liability for the customer's failure to comply with these requirements.

The safety precautions listed below represent warnings of certain dangers of which Motorola is aware. You, as the user of the product, should follow these warnings and all other safety precautions necessary for the safe operation of the equipment in your operating environment.

Ground the Instrument.

To minimize shock hazard, the equipment chassis and enclosure must be connected to an electrical ground. The equipment is supplied with a three-conductor ac power cable. The power cable must be plugged into an approved three-contact electrical outlet. The power jack and mating plug of the power cable meet International Electrotechnical Commission (IEC) safety standards.

Do Not Operate in an Explosive Atmosphere.

Do not operate the equipment in the presence of flammable gases or fumes. Operation of any electrical equipment in such an environment constitutes a definite safety hazard.

Keep Away From Live Circuits.

Operating personnel must not remove equipment covers. Only Factory Authorized Service Personnel or other qualified maintenance personnel may remove equipment covers for internal subassembly or component replacement or any internal adjustment. Do not replace components with power cable connected. Under certain conditions, dangerous voltages may exist even with the power cable removed. To avoid injuries, always disconnect power and discharge circuits before touching them.

Do Not Service or Adjust Alone.

Do not attempt internal service or adjustment unless another person capable of rendering first aid and resuscitation is present.

Use Caution When Exposing or Handling the CRT.

Breakage of the Cathode-Ray Tube (CRT) causes a high-velocity scattering of glass fragments (implosion). To prevent CRT implosion, avoid rough handling or jarring of the equipment. Handling of the CRT should be done only by qualified maintenance personnel using approved safety mask and gloves.

Do Not Substitute Parts or Modify Equipment.

Because of the danger of introducing additional hazards, do not install substitute parts or perform any unauthorized modification of the equipment. Contact your local Motorola representative for service and repair to ensure that safety features are maintained.

Dangerous Procedure Warnings.

Warnings, such as the example below, precede potentially dangerous procedures throughout this manual. Instructions contained in the warnings must be followed. You should also employ all other safety precautions which you deem necessary for the operation of the equipment in your operating environment.

WARNING

Dangerous voltages, capable of causing death, are present in this equipment. Use extreme caution when handling, testing, and adjusting.

Contents

Introduction 1-1
Manual Terminology 1-1
Overview 1-3
Feature Summary 1-3
System Block Diagram 1-5
Functional Description 1-7
- Overview 1-7

Programming Model 1-8
- Memory Maps 1-8
  - Processor Memory Maps 1-8
  - PCI Memory Maps 1-14
  - VMEbus Mapping 1-21
- Falcon-Controlled System Registers 1-27
  - System Configuration Register (SYSCR) 1-28
  - Memory Configuration Register (MEMCR) 1-30
  - System External Cache Control Register (SXCCR) 1-32
  - Processor 0 External Cache Control Register (P0XCCR) 1-33
  - Processor 1 External Cache Control Register (P1XCCR) 1-33
  - CPU Control Register 1-33

ISA Local Resource Bus 1-34
- W83C553 PIB Registers 1-34
- 16550 UART 1-34
- General-Purpose Software-Readable Header (J17) 1-35
- NVRAM/RTC & Watchdog Timer Registers 1-36
- Module Configuration and Status Registers 1-36
  - CPU Configuration Register 1-37
  - Base Module Feature Register 1-38
  - Base Module Status Register (BMSR) 1-39
  - Seven-Segment Display Register 1-40
- VME Registers 1-40
  - LM/SIG Control Register 1-41
  - LM/SIG Status Register 1-42
  - Location Monitor Upper Base Address Register 1-43
  - Location Monitor Lower Base Address Register 1-44
  - Semaphore Register 1 1-44
  - Semaphore Register 2 1-45
  - VME Geographical Address Register (VGAR) 1-45

Emulated Z8536 CIO Registers and Port Pins 1-46
Emulated Z8536 Registers 1-46
Z8536 CIO Port Pins 1-46
ISA DMA Channels 1-47
Introduction 2-1
Overview 2-1
Features 2-1
Block Diagram 2-3
Functional Description 2-4
Architectural Overview 2-4
MPC Bus Interface 2-4
MPC Address Mapping 2-4
MPC Slave 2-6
MPC Write Posting 2-8
MPC Master 2-8
MPC Arbiter 2-10
MPC Bus Timer 2-10
PCI Interface 2-10
PCI Address Mapping 2-11
PCI Slave 2-14
PCI Write Posting 2-17
PCI Master 2-17
Generating PCI Cycles 2-21
Endian Conversion 2-25
When MPC Devices are Big-Endian 2-25
When MPC Devices are Little Endian 2-26
Raven Registers 2-27
Error Handling 2-28
Transaction Ordering 2-29
Registers 2-31
MPC Registers 2-31
Vendor ID/Device ID Registers 2-33
Revision ID Register 2-33
General Control-Status/Feature Registers 2-34
MPC Arbiter Control Register 2-37
Prescaler Adjust Register 2-37
MPC Error Enable Register 2-38
MPC Error Status Register 2-40
MPC Error Address Register 2-42
MPC Error Attribute Register - MERAT 2-43
PCI Interrupt Acknowledge Register 2-45

MPC Slave Address (0,1 and 2) Registers 2-47
MPC Slave Address (3) Register 2-48
MPC Slave Offset/Attribute (0,1 and 2) Registers 2-49
MPC Slave Offset/Attribute (3) Registers 2-50
General Purpose Registers 2-51
PCI Registers 2-51
Vendor ID/ Device ID Registers 2-53
PCI Command/ Status Registers 2-53
Revision ID/ Class Code Registers 2-55
I/O Base Register 2-56
Memory Base Register 2-57
PCI Slave Address (0,1,2 and 3) Registers 2-58
PCI Slave Attribute/ Offset (0,1,2 and 3) Registers 2-59
CONFIG_ADDRESS Register 2-60
CONFIG_DATA Register 2-63
Raven Interrupt Controller Implementation 2-65
Introduction 2-65
The Raven Interrupt Controller (RavenMPIC) Features 2-65
Architecture 2-65
CSR's Readability 2-66
Interrupt Source Priority 2-66
Processor's Current Task Priority 2-66
Nesting of Interrupt Events 2-66
Spurious Vector Generation 2-67
Interprocessor Interrupts (IPI) 2-67
8259 Compatibility 2-67
Raven-Detected Errors 2-68
Timers 2-68
Interrupt Delivery Modes 2-69
Block Diagram Description 2-70
Program Visible Registers 2-71
Interrupt Pending Register (IPR) 2-71
Interrupt Selector (IS) 2-71
Interrupt Request Register (IRR) 2-72
In-Service Register (ISR) 2-72
Interrupt Router 2-72
MPIC Registers 2-74
RavenMPIC Registers 2-74
Feature Reporting Register 2-79
Global Configuration Register 2-80
Vendor Identification Register 2-81
Processor Init Register 2-81

IPI Vector/Priority Registers 2-82
Spurious Vector Register 2-83
Timer Frequency Register 2-83
Timer Current Count Registers 2-84
Timer Basecount Registers 2-84
Timer Vector/Priority Registers 2-85
Timer Destination Registers 2-86
External Source Vector/Priority Registers 2-87
External Source Destination Registers 2-88
Raven-Detected Errors Vector/Priority Register 2-89
Raven-Detected Errors Destination Register 2-90
Interprocessor Interrupt Dispatch Registers 2-90
Interrupt Task Priority Registers 2-91
Interrupt Acknowledge Registers 2-92
End-of-Interrupt Registers 2-92
Programming Notes 2-93
External Interrupt Service 2-93
Reset State 2-94
Operation 2-95
Interprocessor Interrupts 2-95
Dynamically Changing I/O Interrupt Configuration 2-95
EOI Register 2-96
Interrupt Acknowledge Register 2-96
8259 Mode 2-96
Current Task Priority Level 2-96
Architectural Notes 2-97
Introduction 3-1
Overview 3-1
Bit Ordering Convention 3-1
Features 3-1
Block Diagrams 3-2
Functional Description 3-6
Performance 3-6
Four-beat Reads/Writes 3-6
Single-beat Reads/Writes 3-7
DRAM Speeds 3-7
ROM/Flash Speeds 3-11
PowerPC 60x Bus Interface 3-12
Responding to Address Transfers 3-12
Completing Data Transfers 3-12
Cache Coherency 3-12

Cache Coherency Restrictions 3-13
L2 Cache Support 3-13
ECC 3-13
Cycle Types 3-13
Error Reporting 3-14
Error Logging 3-15
DRAM Tester 3-15
ROM/Flash Interface 3-16
Refresh/Scrub 3-20
Blocks A and/or B Present, Blocks C and D Not Present 3-20
Blocks A and/or B Present, Blocks C and/or D present 3-21
DRAM Arbitration 3-22
Chip Defaults 3-22
External Register Set 3-23
CSR Accesses 3-23
Programming Model 3-24
CSR Architecture 3-24
Register Summary 3-29
Detailed Register Bit Descriptions 3-32
Vendor/Device Register 3-33
Revision ID/ General Control Register 3-33
DRAM Attributes Register 3-35
DRAM Base Register 3-37
CLK Frequency Register 3-37
ECC Control Register 3-38
Error Logger Register 3-42
Error_Address Register 3-45
Scrub/Refresh Register 3-45
Refresh/Scrub Address Register 3-46
ROM A Base/Size Register 3-47
ROM B Base/Size Register 3-50
DRAM Tester Control Registers 3-53
32-Bit Counter 3-53
Test SRAM 3-54
Power-Up Reset Status Register 1 3-55
Power-Up Reset Status Register 2 3-55
External Register Set 3-56
Software Considerations 3-57
Parity Checking on the PowerPC Bus 3-57
Programming ROM/Flash Devices 3-57
Writing to the Control Registers 3-57

Sizing DRAM 3-58
ECC Codes 3-61
Data Paths 3-63
General Information 4-1
Introduction 4-1
Product Overview - Features 4-1
Functional Description 4-2
Architectural Overview 4-2
VMEbus Interface 4-4
PCI Bus Interface 4-5
Interrupter and Interrupt Handler 4-6
DMA Controller 4-7
Registers - Universe Control and Status Registers (UCSR) 4-8
Universe Register Map 4-9
Universe Chip Problems after a PCI Reset 4-14
Problem Description 4-14
Examples 4-16
Example 1: MVME2600 Series Board Exhibits Problem 4-16
Example 2: MVME3600 Series Board Acts Differently 4-17
Example 3: Universe Chip is Checked at Tundra 4-19
Introduction 5-1
PCI Arbitration 5-1
Interrupt Handling 5-2
RavenMPIC 5-3
8259 Interrupts 5-4
ISA DMA Channels 5-7
Exceptions 5-8
Sources of Reset 5-8
Soft Reset 5-9
Universe Chip Problems after a PCI Reset 5-9
Error Notification and Handling 5-10
Endian Issues 5-11
Processor/Memory Domain 5-14
Raven's Involvement 5-14
PCI Domain 5-14
PCI-SCSI 5-14
PCI-Ethernet 5-14
PCI-Graphics 5-15
Universe's Involvement 5-15
VMEbus Domain 5-15
ROM/Flash Initialization 5-16

Motorola Computer Group Documents A-1
Manufacturers' Documents A-2
Related Specifications A-5
Abbreviations, Acronyms, and Terms to Know GL-1

List of Figures

MVME2300 Series System Block Diagram 1-6
VMEbus Master Mapping 1-22
VMEbus Slave Mapping 1-24
General-Purpose Software-Readable Header 1-35
Raven Block Diagram 2-3
MPC to PCI Address Decoding 2-5
MPC to PCI Address Translation 2-6
PCI to MPC Address Decoding 2-12
PCI to MPC Address Translation 2-13
PCI Spread I/O Address Translation 2-22
Big to Little Endian Data Swap 2-26
RavenMPIC Block Diagram 2-70
Falcon Pair Used with DRAM in a System 3-3
Falcon Internal Data Paths (Simplified) 3-4
Overall DRAM Connections 3-5
Data Path for Reads from the Falcon Internal CSRs 3-24
Data Path for Writes to the Falcon Internal CSRs 3-25
Memory Map for Byte Reads to the CSR 3-26
Memory Map for Byte Writes to the Internal Register Set and Test SRAM 3-27
Memory Map for 4-Byte Reads to the CSR 3-28
Memory Map for 4-Byte Writes to the Internal Register Set and Test SRAM 3-28
PowerPC Data to DRAM Data Correspondence 3-64
Architectural Diagram for the Universe 4-3
UCSR Access Mechanisms 4-8
MVME2300 Series Interrupt Architecture 5-2
PIB Interrupt Handler Block Diagram 5-5
Big-Endian Mode 5-12
Little-Endian Mode 5-13

Board Description and Memory Maps

1

Introduction

This manual provides programming information for the MVME230x VME Processor Modules. Extensive programming information is provided for several Application-Specific Integrated Circuit (ASIC) devices used on the boards. Reference information is included in Appendix A for the Large Scale Integration (LSI) devices used on the boards and sources for additional information are listed.

This chapter briefly describes the board level hardware features of the MVME2300-series VME Processor Modules. The chapter begins with a board level overview and features list. Memory maps are next, and are the major feature of this chapter.

Programmable registers in the MVME2300-series that reside in ASICs are covered in the chapters on those ASICs. Chapter 2 covers the Raven chip, Chapter 3 covers the Falcon chip set, Chapter 4 covers the Universe chip, and Chapter 5 covers certain programming features, such as interrupts and exceptions. Appendix A lists all related documentation.

Manual Terminology

Throughout this manual, a convention is used which precedes data and address parameters by a character identifying the numeric format as follows:

$	dollar	specifies a hexadecimal character
%	percent	specifies a binary number
&	ampersand	specifies a decimal number

For example, “12” is the decimal number twelve, and “$12” is the decimal number eighteen.

Unless otherwise specified, all address references are in hexadecimal.

An asterisk (*) following the signal name for signals which are *level significant* denotes that the signal is *true* or valid when the signal is low.

An asterisk (*) following the signal name for signals which are *edge significant* denotes that the actions initiated by that signal occur on high to low transition.

Note In some places in this document, an underscore (_) following the signal name is used to indicate an active low signal.

In this manual, *assertion* and *negation* are used to specify forcing a signal to a particular state. In particular, assertion and assert refer to a signal that is active or true; negation and negate indicate a signal that is inactive or false. These terms are used independently of the voltage level (high or low) that they represent.

Data and address sizes for MPC60*x* chips are defined as follows:

- A *byte* is eight bits, numbered 0 through 7, with bit 0 being the least significant.
- A *half-word* is 16 bits, numbered 0 through 15, with bit 0 being the least significant.
- A *word* or *single word* is 32 bits, numbered 0 through 31, with bit 0 being the least significant.
- A *double word* is 64 bits, numbered 0 through 63, with bit 0 being the least significant.

Refer to Chapter 5 for *Endian Issues*, which covers which parts of the MVME2300 series use *big-endian* byte ordering, and which use *small-endian* byte ordering.

The terms *control bit* and *status bit* are used extensively in this document. The term control bit is used to describe a bit in a register that can be set and cleared under software control. The term *true* is

used to indicate that a bit is in the state that enables the function it controls. The term *false* is used to indicate that the bit is in the state that disables the function it controls. In all tables, the terms 0 and 1 are used to describe the actual value that should be written to the bit, or the value that it yields when read. The term *status bit* is used to describe a bit in a register that reflects a specific condition. The status bit can be read by software to determine operational or exception conditions.

Overview

The MVME2300-series VME Processor Module family, hereafter sometimes referred to simply as the MVME230x or the V2300 series, provides many standard features required by a computer system: Ethernet interface, async serial port, boot Flash, and up to 128MB of ECC DRAM.

Feature Summary

There are many models based on the MVME2300 series architecture. The following table summarizes the major features of the MVME2300 series:

Table 1-1. MVME230x Features

Feature	Description
Microprocessor	200 MHZ MPC603 PowerPC™ processor (MVME2301 - 2304 models)
	300 MHZ MPC604 PowerPC™ processor (MVME2305 - 2308 models)
Form factor	6U VMEbus
ECC DRAM	Two-way interleaved, ECC-protected 16MB, 32MB, 64MB, or 128MB

Table 1-1. MVME230x Features (Continued)

Feature	Description
Flash memory	Bank B consists of two 32-pin PLCC sockets that can be populated with 1MB 8-bit Flash devices
	Bank A consists of four 16-bit Smart Voltage SMT devices that can be populated with 8Mbit Flash devices (4MB) or 4Mbit (2MB)
Real-time clock	8KB NVRAM with RTC and battery backup (SGS-Thomson M48T59/T559)
Switches	Reset (RST) and abort (ABT)
Status LEDs	Four: Board fail (BFL), CPU, PMC (one for PMC slot 2, one for slot 1)
Timers	One 16-bit timer in W83C553 ISA bridge; four 32-bit timers in Raven (MPIC) device)
	Watchdog timer provided in SGS-Thomson M48T59
Interrupts	Software interrupt handling via Raven (PCI-MPU bridge) and Winbond (PCI-ISA bridge) controllers
VME I/O	VMEbus P2 connector
Serial I/O	One asynchronous debug port via RJ45 connector on front panel
Ethernet I/O	10Base-T/100Base-TX connections via RJ45 connector on front panel
PCI interface	Two IEEE P1386.1 PCI Mezzanine Card (PMC) slots for one double-width or two single-width PMCs
	Front panel and/or VMEbus P2 I/O on both PMC slots
	One 114-pin Mictor connector for optional PMCspan expansion module
VMEbus interface	VMEbus system controller functions
	VME64 extension
	VMEbus-to-local-bus interface (A24/A32, D8/D16/D32/block transfer [D8/D16/D32/D64])
	Local-bus-to-VMEbus interface (A16/A24/A32, D8/D16/D32)
	VMEbus interrupter
	VMEbus interrupt handler
	Global Control/Status Register (GCSR) for interprocessor communications
	DMA for fast local memory/VMEbus transfers (A16/A24/A32, D16/D32/D64)

System Block Diagram

The MVME2300 series *does not* provide any look-aside external cache option. The Falcon chip set controls the boot Flash and the ECC DRAM. The Raven ASIC functions as the 64-bit PCI host bridge and the MPIC interrupt controller. PCI devices include: VME, Ethernet, and two PMC slots. Standard I/O functions are provided by the UART device which resides on the ISA bus. The NVRAM/RTC also resides on the ISA bus. The general system block diagram for MVME2300 series is shown below:

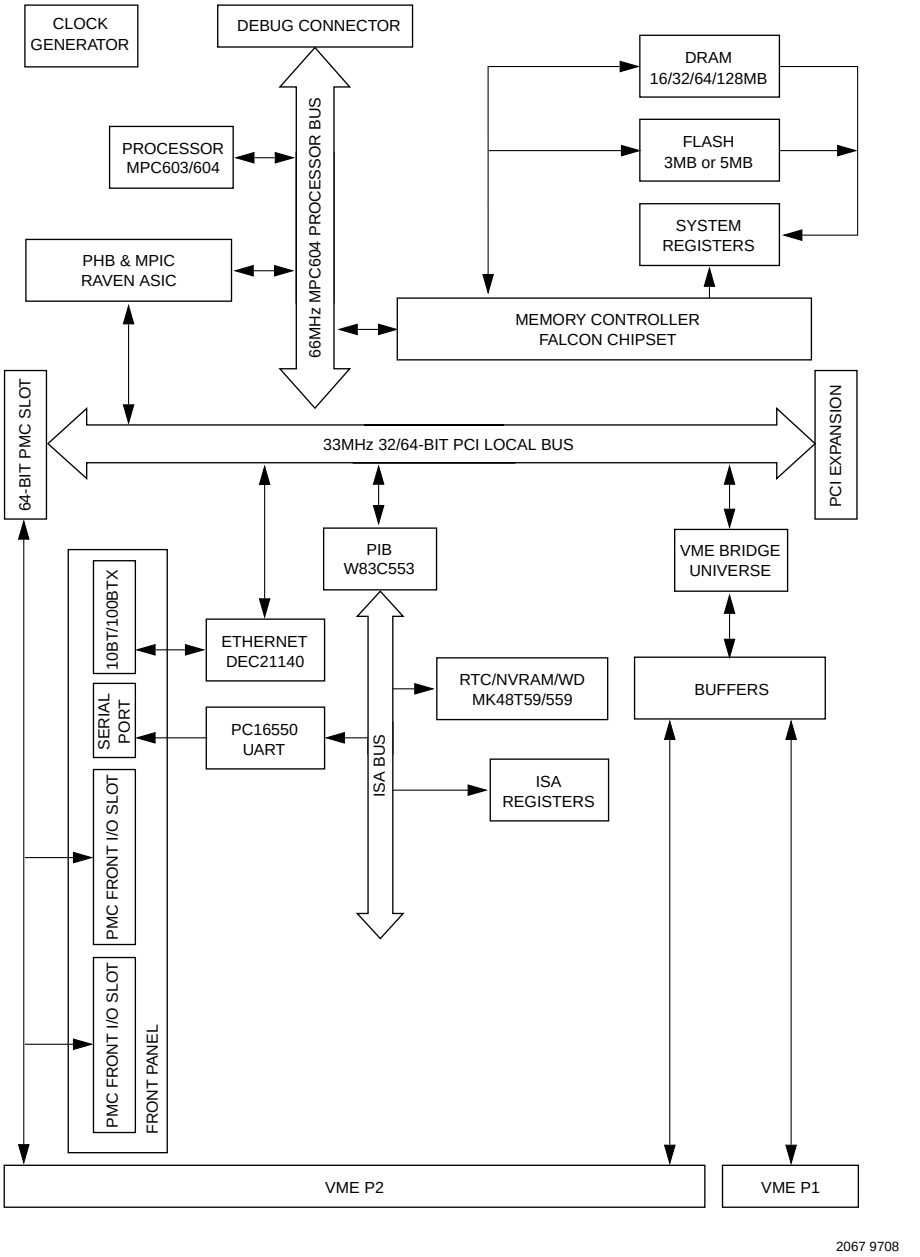

Figure 1-1. MVME2300 Series System Block Diagram

Functional Description

Overview

The MVME2300 series is a family of single-slot VME processor modules. It consists of the MPC603/604 processor, the Raven PCI Bridge & Interrupt Controller, the ECC Memory Controller Falcon chipset, 3MB or 5MB of Flash memory, 16MB to 128MB of ECC-protected DRAM, and a rich set of features of I/O peripherals.

I/O peripheral devices on the PCI bus are: Ethernet chip, Universe VMEbus interface ASIC, and two PMC slots. Functions provided from the ISA bus are: one asynchronous serial port, a real-time clock, counters/timers, and a software-readable header.

The MVME2300 series board interfaces to the VMEbus via the P1 and P2 connectors, which use the new 5-row 160-pin connectors as specified in the proposed VME64 Extension Standard. It also draws +5V, +12V, and -12V power from the VMEbus backplane through these two connectors. 3.3V supply is regulated onboard from the +5V power.

Front panel connectors on the MVME2300 series board include: an RJ45 connector for the Ethernet 10Base-T/100Base-TX interface, and an RJ45 connector for the async serial debug port.

The MVME2300 series contains two IEEE1386.1 PCI Mezzanine Card (PMC) slots. These PMC slots are 64-bit capable and support both front and rear I/O. Pins 1 through 64 of PMC slot 1 connector J14 are routed to row C and row A of the 5-row DIN P2 connector. Pins 1 through 46 of PMC slot 2 connector J24 are routed to row D and row Z of P2.

Additional PCI expansion is supported with a 114-pin Mictor connector. This connection allows stacking of one or two PMCspan dual-PMC carrier boards, to increase the I/O capability. Each PMCspan board requires an additional VME slot.

Programming Model

Memory Maps

The following sections describe the memory maps for the MVME2300 series.

Processor Memory Maps

The Processor memory map is controlled by the Raven ASIC and the Falcon chipset. The Raven ASIC and the Falcon chipset have flexible programming Map Decoder registers to customize the system to fit many different applications.

Default Processor Memory Map

After a reset, the Raven ASIC and the Falcon chipset provide the default processor memory map as shown in the following table.

Table 1-2. Default Processor Memory Map

Processor Address		Size	Definition	Notes
Start	End			
0000 0000	7FFF FFFF	2G	Not mapped	
8000 0000	8001 FFFF	128K	PCI/ISA I/O Space	1
8002 0000	FEF7 FFFF	2G - 16M - 640K	Not mapped	
FEF8 0000	FEF8 FFFF	64K	Falcon Registers	
FEF9 0000	FEFE FFFF	384K	Not mapped	
FEFF 0000	FEFF FFFF	64K	Raven Registers	
FF00 0000	FFEF FFFF	15M	Not mapped	
FFF0 0000	FFFF FFFF	1M	ROM/FLASH Bank A or Bank B	2

Notes:

1. This default map for PCI/ISA I/O space allows software to determine if the system is MPC105-based or Falcon/Raven-based by examining either the PHB Device ID or the CPU Type Register.
2. The first one Mbyte of ROM/FLASH Bank A appears at this range after a reset if the ***rom_b_rv*** control bit is cleared. If the ***rom_b_rv*** control bit is set then this address range maps to ROM/FLASH Bank B.

Processor CHRP Memory Map

The following table shows a recommended CHRP memory map from the point of view of the processor.

Table 1-3. CHRP Memory Map Example

Processor Address		Size	Definition	Notes
Start	End			
0000 0000	top_dram	dram_size	System Memory (onboard DRAM)	1, 2
4000 0000	FCFF FFFF	3G - 48M	PCI Memory Space: 4000 0000 to FCFF FFFF	3,4,8
FD00 0000	FDFF FFFF	16M	Zero-Based PCI/ISA Memory Space (mapped to 00000000 to 00FFFFFF)	3,8
FE00 0000	FE7F FFFF	8M	Zero-Based PCI/ISA I/O Space (mapped to 00000000 to 007FFFFF)	3,5,8
FE80 0000	FEF7 FFFF	7.5M	Reserved	
FEF8 0000	FEF8 FFFF	64K	Falcon Registers	
FEF9 0000	FEFE FFFF	384K	Reserved	
FEFF 0000	FEFF FFFF	64K	Raven Registers	9
FF00 0000	FF7F FFFF	8M	ROM/FLASH Bank A	1,7
FF80 0000	FF8F FFFF	1M	ROM/FLASH Bank B	1,7
FF50 0000	FFEF FFFF	6M	Reserved	
FFF0 0000	FFFF FFFF	1M	ROM/FLASH Bank A or Bank B	7

Notes:

1. Programmable via Falcon chipset. For the MVME2300 series, RAM size is limited to 128MB and ROM/FLASH to 4MB.
2. To enable the “Processor-hole” area, program the Falcon chipset to ignore 0x000A0000 - 0x000BFFFF address range and program the Raven to map this address range to PCI memory space.

3. Programmable via Raven ASIC.
4. CHRP requires the starting address for the PCI memory space to be 256MB-aligned.
5. Programmable via Raven ASIC for either contiguous or spread-I/O mode.
6. The actual size of each ROM/FLASH bank may vary.
7. The first one Mbyte of ROM/FLASH Bank A appears at this range after a reset if the ***rom_b_rv*** control bit is cleared. If the ***rom_b_rv*** control bit is set then this address range maps to ROM/FLASH Bank B.
8. This range can be mapped to the VMEbus by programming the Universe ASIC accordingly. The map shown is the recommended setting which uses the Special PCI Slave Image and two of the four programmable PCI Slave Images.
9. The only method to generate a PCI Interrupt Acknowledge cycle (8259 IACK) is to perform a read access to the Raven's PIACK register at 0xFEFF0030.

The following table shows the programmed values for the associated Raven MPC registers for the processor CHRP memory map.

Table 1-4. Raven MPC Register Values for CHRP Memory Map

Address	Register Name	Register Value
FEFF 0040	MSADD0	4000 FCFF
FEFF 0044	MSOFF0 & MSATT0	0000 00C2
FEFF 0048	MSADD1	FD00 FDFF
FEFF 004C	MSOFF1 & MSATT1	0300 00C2
FEFF 0050	MSADD2	0000 0000
FEFF 0054	MSOFF2 & MSATT2	0000 0002
FEFF 0058	MSADD3	FE00 FE7F
FEFF 005C	MSOFF3 & MSATT3	0200 00C0

Processor PREP Memory Map

The Raven/Falcon chipset can be programmed for PREP-compatible memory map. The following table shows the PREP memory map of the MVME2300 series from the point of view of the processor.

Table 1-5. PREP Memory Map Example

Processor Address		Size	Definition	Notes
Start	End			
0000 0000	top_dram	dram_size	System Memory (onboard DRAM)	1
8000 0000	BFFF FFFF	1G	Zero-Based PCI I/O Space: 0000 0000 - 3FFFF FFFF	2
C000 0000	FCFF FFFF	1G - 48M	Zero-Based PCI/ISA Memory Space: 0000 0000 - 3CFFFFFF	2, 5
FD00 0000	FEF7 FFFF	40.5M	Reserved	
FEF8 0000	FEF8 FFFF	64K	Falcon Registers	
FEF9 0000	FEFE FFFF	384K	Reserved	
FEFF 0000	FEFF FFFF	64K	Raven Registers	6
FF00 0000	FF7F FFFF	8M	ROM/FLASH Bank A	1, 3
FF80 0000	FF8F FFFF	1M	ROM/FLASH Bank B	1, 3
FF90 0000	FFEF FFFF	6M	Reserved	
FFF0 0000	FFFF FFFF	1M	ROM/FLASH Bank A or Bank B	4

Notes:

1. Programmable via Falcon chipset. For the MVME2300 series, RAM size is limited to 128MB and ROM/FLASH to 4MB.
2. Programmable via Raven ASIC.
3. The actual size of each ROM/FLASH bank may vary.

4. The first 1 Mbyte of ROM/FLASH Bank A appears at this range after a reset if the ***rom_b_rv*** control bit is cleared. If the ***rom_b_rv*** control bit is set then this address range maps to ROM/FLASH Bank B.

5. This range can be mapped to the VMEbus by programming the Universe ASIC accordingly.

6. The only method to generate a PCI Interrupt Acknowledge cycle (8259 IACK) is to perform a read access to the Raven's PIACK register at 0xFEFF0030.

The following table shows the programmed values for the associated Raven MPC registers for the processor PREP memory map.

Table 1-6. Raven MPC Register Values for PREP Memory Map

Address	Register Name	Register Value
FEFF 0040	MSADD0	C000 FCFF
FEFF 0044	MSOFF0 & MSATT0	4000 00C2
FEFF 0048	MSADD1	0000 0000
FEFF 004C	MSOFF1 & MSATT1	0000 0002
FEFF 0050	MSADD2	0000 0000
FEFF 0054	MSOFF2 & MSATT2	0000 0002
FEFF 0058	MSADD3	8000 BFFF
FEFF 005C	MSOFF3 & MSATT3	8000 00C0

PCI Configuration Access

PCI Configuration accesses are accomplished via the CONFIG_ADD and CONFIG_DAT registers. These two registers are implemented by the Raven ASIC. In the CHRP memory map example, the CONFIG_ADD and CONFIG_DAT registers are located at 0xFE000CF8 and 0xFE000CFC, respectively. With the

PREP memory map, the CONFIG_ADD register and the CONFIG_DAT register are located at 0x80000CF8 and 0x80000CFC, respectively.

PCI Memory Maps

The PCI memory map is controlled by the Raven ASIC and the Universe ASIC. The Raven ASIC and the Universe ASIC have flexible programming Map Decoder registers to customize the system to fit many different applications.

Default PCI Memory Map

After a reset, the Raven ASIC and the Universe ASIC turn all the PCI slave map decoders off. Software must program the appropriate map decoders for a specific environment.

PCI CHRP Memory Map

The following table shows a PCI memory map of the MVME2300 series that is CHRP-compatible from the point of view of the PCI local bus.

Table 1-7. PCI CHRP Memory Map

PCI Address		Size	Definition	Notes
Start	End			
0000 0000	top_dram	dram_size	Onboard ECC DRAM	1
4000 0000	EFFF FFFF	3G - 256M	VMEbus A32/D32 (Super/Program)	3
F000 0000	F7FF FFFF	128M	VMEbus A32/D16 (Super/Program)	3
F800 0000	F8FE FFFF	16M - 64K	VMEbus A24/D16 (Super/Program)	4
F8FF 0000	F8FF FFFF	64K	VMEbus A16/D16 (Super/Program)	4
F900 0000	F9FE FFFF	16M - 64K	VMEbus A24/D32 (Super/Data)	4
F9FF 0000	F9FF FFFF	64K	VMEbus A16/D32 (Super/Data)	4
FA00 0000	FAFE FFFF	16M - 64K	VMEbus A24/D16 (User/Program)	4

Table 1-7. PCI CHRP Memory Map (Continued)

PCI Address		Size	Definition	Notes
Start	End			
FAFF 0000	FAFF FFFF	64K	VMEbus A16/D16 (User/Program)	4
FB00 0000	FBFE FFFF	16M - 64K	VMEbus A24/D32 (User/Data)	4
FBFF 0000	FBFF FFFF	64K	VMEbus A16/D32 (User/Data)	4
FC00 0000	FC03 FFFF	256K	RavenMPIC	1
FC04 0000	FCFF FFFF	16M - 256K	PCI Memory Space	
FD00 0000	FDFF FFFF	16M	PCI Memory Space or System Memory Alias Space (mapped to 00000000 to 00FFFFFF)	1
FE00 0000	FFFF FFFF	48M	Reserved	

Notes:

1. Programmable via the Raven's PCI Configuration registers. For the MVME2300 series, RAM size is limited to 128MB.
2. To enabled the CHRP "io-hole", program the Raven to ignore the 0x000A0000 - 0x000FFFFF address range.
3. Programmable mapping via the four PCI Slave Images in the Universe ASIC.
4. Programmable mapping via the Special Slave Image (SLSI) in the Universe ASIC.

The following table shows the programmed values for the associated Raven PCI registers for the PCI CHRP memory map.

Table 1-8. Raven PCI Register Values for CHRP Memory Map

Configuration Address Offset	Configuration Register Name	Register Value (Aliasing OFF)	Register Value (Aliasing ON)
$14	RavenMPIC MBASE	FC00 0000	FC00 0000
$80	PSADD0	0000 3FFF	0100 3FFF
$84	PSOFF0 & PSATT0	0000 00FX	0000 00FX
$88	PSADD1	0000 0000	FD00 FDFF
$8C	PSOFF1 & PSATT1	0000 0000	0000 00FX
$90	PSADD2	0000 0000	0000 0000
$94	PSOFF2 & PSATT2	0000 0000	0000 0000
$98	PSADD3	0000 0000	0000 0000
$9C	PSOFF3 & PSATT3	0000 0000	0000 0000

The next table shows the programmed values for the associated Universe PCI registers for the PCI CHRP memory map.

Table 1-9. Universe PCI Register Values for CHRP Memory Map

Configuration Address Offset	Configuration Register Name	Register Value
$100	LSI0_CTL	C082 5100
$104	LSI0_BS	4000 0000
$108	LSI0_BD	F000 0000
$10C	LSI0_TO	XXXX 0000
$114	LSI1_CTL	C042 5100
$118	LSI1_BS	F000 0000

Table 1-9. Universe PCI Register Values for CHRP Memory Map (Continued)

Configuration Address Offset	Configuration Register Name	Register Value
$11C	LSI1_BD	F800 0000
$120	LSI1_TO	XXXX 0000
$128	LSI2_CTL	0000 0000
$12C	LSI2_BS	XXXX XXXX
$130	LSI2_BD	XXXX XXXX
$134	LSI2_TO	XXXX XXXX
$13C	LSI3_CTL	0000 0000
$140	LSI3_BS	XXXX XXXX
$144	LSI3_BD	XXXX XXXX
$148	LSI3_TO	XXXX XXXX
$188	SLSI	C0A053F8

PCI PREP Memory Map

The following table shows a PCI memory map of the MVME2300 series that is PREP-compatible from the point of view of the PCI local bus.

Table 1-10. PCI PREP Memory Map

PCI Address		Size	Definition	Notes
Start	End			
0000 0000	00FF FFFF	16M	PCI/ISA Memory Space	
0100 0000	2FFF FFFF	752M	VMEbus A32/D32 (Super/Program)	3
3000 0000	37FF FFFF	128M	VMEbus A32/D16 (Super/Program)	3
3800 0000	38FE FFFF	16M - 64K	VMEbus A24/D16 (Super/Program)	4
38FF 0000	38FF FFFF	64K	VMEbus A16/D16 (Super/Program)	4
3900 0000	39FE FFFF	16M - 64K	VMEbus A24/D32 (Super/Data)	4
39FF 0000	39FF FFFF	64K	VMEbus A16/D32 (Super/Data)	4
3A00 0000	3AFE FFFF	16M - 64K	VMEbus A24/D16 (User/Program)	4
3AFF 0000	3AFF FFFF	64K	VMEbus A16/D26 (User/Program)	4
3B00 0000	3BFE FFFF	16M - 64K	VMEbus A24/D32 (User/Data)	4
3BFF 0000	3BFF FFFF	64K	VMEbus A16/D32 (User/Data)	4
3C00 0000	7FFF FFFF	1G + 64M	PCI Memory Space	
8000 0000	FBFF FFFF	2G - 64M	Onboard ECC DRAM	1
FC00 0000	FC03 FFFF	256K	RavenMPIC	1
FC04 0000	FFFF FFFF	64M - 256K	PCI Memory Space	

Notes:

1. Programmable via the Raven's PCI Configuration registers. For the MVME2300 series, RAM size is limited to 128MB.

2. To enabled the CHRP “io-hole”, program the Raven to ignore the 0x000A0000 - 0x000FFFFF address range.
3. Programmable mapping via the four PCI Slave Images in the Universe ASIC.
4. Programmable mapping via the Special Slave Image (SLSI) in the Universe ASIC.

The following table shows the programmed values for the associated Raven PCI registers for the PREP-compatible memory map.

Table 1-11. Raven PCI Register Values for PREP Memory Map

Configuration Address Offset	Configuration Register Name	Register Value
$14	RavenMPIC MBASE	FC00 0000
$80	PSADD0	8000 FBFF
$84	PSOFF0 & PSATT0	8000 00FX
$88	PSADD1	0000 0000
$8C	PSOFF1 & PSATT1	0000 0000
$90	PSADD2	0000 0000
$94	PSOFF2 & PSATT2	0000 0000
$98	PSADD3	0000 0000
$9C	PSOFF3 & PSATT3	0000 0000

The next table shows the programmed values for the associated Universe PCI registers for the PCI PREP memory map.

Table 1-12. Universe PCI Register Values for PREP Memory Map

Configuration Address Offset	Configuration Register Name	Register Value
$100	LSI0_CTL	C082 5100
$104	LSI0_BS	0100 0000
$108	LSI0_BD	3000 0000
$10C	LSI0_TO	XXXX 0000
$114	LSI1_CTL	C042 5100
$118	LSI1_BS	3000 0000
$11C	LSI1_BD	3800 0000
$120	LSI1_TO	XXXX 0000
$128	LSI2_CTL	0000 0000
$12C	LSI2_BS	XXXX XXXX
$130	LSI2_BD	XXXX XXXX
$134	LSI2_TO	XXXX XXXX
$13C	LSI3_CTL	0000 0000
$140	LSI3_BS	XXXX XXXX
$144	LSI3_BD	XXXX XXXX
$148	LSI3_TO	XXXX XXXX
$188	SLSI	C0A05338

VMEbus Mapping

Note For the MVME2300 series, RAM size is limited to 128MB.

VMEbus Master Map

The processor can access any address range in the VMEbus with the help from the address translation capabilities of the Universe ASIC. The recommended mapping is shown in the *Processor Memory Map* section. The following figure illustrates how the VMEbus master mapping is accomplished.

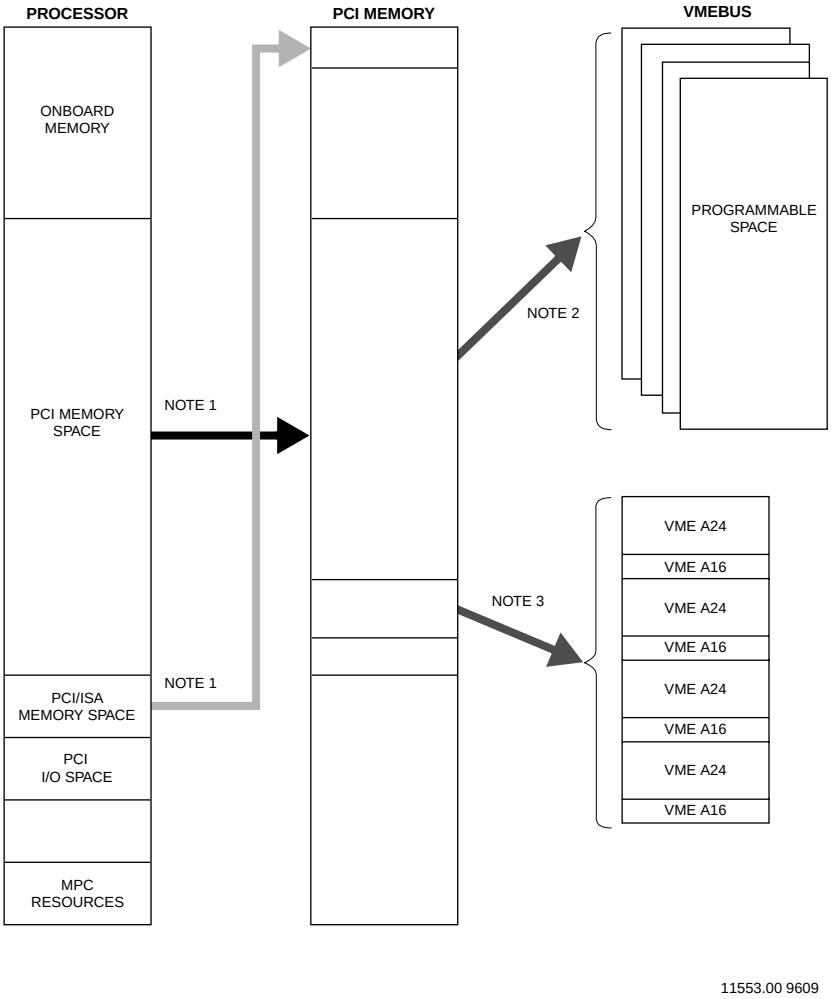

Figure 1-2. VMEbus Master Mapping

Notes:

1. Programmable mapping done by the Raven ASIC.

2. Programmable mapping via the four PCI Slave Images in the Universe ASIC.
3. Programmable mapping via the Special Slave Image (SLSI) in the Universe ASIC.

VMEbus Slave Map

The four programmable VME Slave Images in the Universe ASIC allow other VMEbus masters to get to any devices on the MVME2300 series. The combination of the four Universe VME Slave Images and the four Raven PCI Slave Decoders offers a lot of flexibility for mapping the system resources as seen from the VMEbus. In most applications, the VMEbus only needs to see the system memory and, perhaps, the software interrupt registers (SIR1 and SIR2 registers). An example of the VMEbus slave map is shown below:

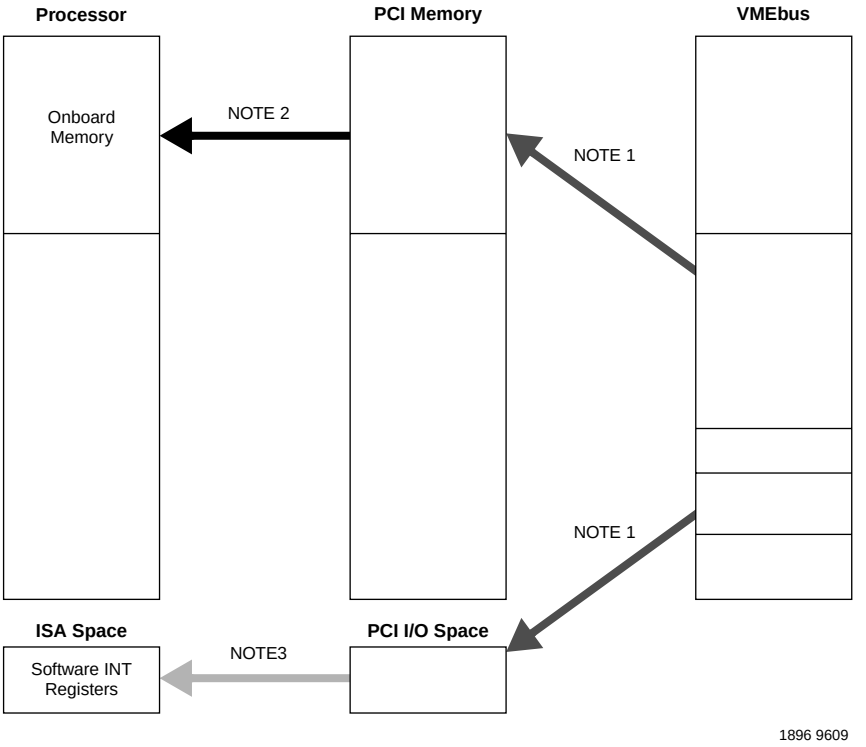

Figure 1-3. VMEbus Slave Mapping

Notes:

1. Programmable mapping via the four VME Slave Images in the Universe ASIC.
2. Programmable mapping via PCI Slave Images in the Raven ASIC.
3. Fixed mapping via the PIB device.

The following table shows the programmed values for the associated Universe registers for the VMEbus slave function.

Table 1-13. Universe PCI Register Values for VMEbus Slave Map Example

Configuration Address Offset	Configuration Register Name	Register Value (CHRP)	Register Value (PREP)
$F00	VSI0_CTL	C0F2 0001	C0F2 0001
$F04	VSI0_BS	4000 0000	4000 0000
$F08	VSI0_BD	4000 1000	4000 1000
$F0C	VSI0_TO	C000 1000	C000 1000
$F14	VSI1_CTL	E0F2 00C0	E0F2 00C0
$F18	VSI1_BS	1000 0000	1000 0000
$F1C	VSI1_BD	2000 0000	2000 0000
$F20	VSI1_TO	F000 0000	7000 0000
$F28	VSI2_CTL	0000 0000	0000 0000
$F2C	VSI2_BS	XXXX XXXX	XXXX XXXX
$F30	VSI2_BD	XXXX XXXX	XXXX XXXX
$F34	VSI2_TO	XXXX XXXX	XXXX XXXX
$F3C	VSI3_CTL	0000 0000	0000 0000
$F40	VSI3_BS	XXXX XXXX	XXXX XXXX
$F44	VSI3_BD	XXXX XXXX	XXXX XXXX
$F48	VSI3_TO	XXXX XXXX	XXXX XXXX

The above register values yield the following VMEbus slave map:

Table 1-14. VMEbus Slave Map Example

VMEbus Address		Size	CHRP Map	PREP Map
Range	Mode			
4000 0000 - 4000 0FFF	A32 U/S/P/D D08/16/32	4K	PCI/ISA I/O Space: 0000 1000 - 0000 1FFF	PCI/ISA I/O Space: 0000 1000 - 0000 1FFF
1000 0000 - 1FFF FFFF	A32 U/S/P/D D08/16/32/64 RMW	256M	PCI/ISA Memory Space (On-board DRAM) 0000 0000 - 0FFF FFFF	PCI/ISA Memory Space (On-board DRAM) 8000 0000 - 8FFF FFFF

Falcon-Controlled System Registers

The Falcon chipset latches the states of the DRAM data lines onto the PR_STAT1 and PR_STAT2 registers. The MVME2300 series uses these status registers to provide the system configuration information. In addition, the Falcon chipset performs the decode and control for an external register port. This function is utilized by the MVME2300 series to provide the system control registers.

Table 1-15. System Register Summary

BIT # ---->	0	1	2	3	4	5	6	7	8	9	10	11	12	13	14	15	16	17	18	19	20	21	22	23	24	25	26	27	28	29	30	31
FEF80400	*System Configuration Register (Upper Falcon's PR_STAT1)*																															
FEF80404	*Memory Configuration Register (Lower Falcon's PR_STAT1)*																															
FEF88000	System External Cache Control Register																															
FEF88300	CPU Control Register																															

The following sub-sections describe these system registers in detail.

System Configuration Register (SYSCR)

The states of the RD[0:31] DRAM data pins, which have weak internal pull-ups, are latched by the upper Falcon chip at a rising edge of the power-up reset and stored in this System Configuration Register to provide some information about the system. Configuration is accomplished with external pull-down resistors. This 32-bit read-only register is defined as follows:

REG	System Configuration Register - $FEF80400																															
BIT	0	1	2	3	4	5	6	7	8	9	10	11	12	13	14	15	16	17	18	19	20	21	22	23	24	25	26	27	28	29	30	31
FIELD	SYSID								SYSCLK				SYSXC				P0STAT				P1STAT											
OPER	READ ONLY																															
RESET	$FD								1111				1111				0111				1111						1	1	$F			

SYSID System Identification. This field specifies the type of the overall system configuration so that the software may appropriately handle any software visible differences. For the MVME2300 series, this field returns a value of $FD.

SYSCLK System Clock Speed. This field relays the system clock speed and the PCI clock speed information as follows:

SYSCLK Value	System Clock Speed	PCI Clock Speed
0b0000 to 0b1100	Reserved	Reserved
0b1101	50MHz	25MHz
0b1110	60MHz	30MHz
0b1111	66.66MHz	33.33MHz

SYSXC System External Cache Size. The MVME2300 series does not offer any external caching options. Reads from this field will always return a hardwired value of 0b1111 indicating the absence of external caching.

P0/1STAT Processor 0/1 Status. This field is encoded as follows:

P0/1STAT Value	Processor 0/1 Present	External In-line Cache Size
0b0000 to 0b0011	Reserved	Reserved
0b0100	YES	1M
0b0101	YES	512K
0b0110	YES	256K
0b0111	YES	None
0b1000 to 0b1111	NO	N/A

Memory Configuration Register (MEMCR)

The states of the RD[00:31] DRAM data pins, which have weak internal pull-ups, are latched by the lower Falcon chip at a rising edge of the power-up reset and stored in this Memory Configuration Register to provide some information about the system memory. Configuration is accomplished with external pull-down resistors. This 32-bit read-only register is defined as follows:

REG	Memory Configuration Register - $FEF80404																															
BIT	32	33	34	35	36	37	38	39	40	41	42	43	44	45	46	47	48	49	50	51	52	53	54	55	56	57	58	59	60	61	62	63
FIELD	M_SIZE0	M_SIZE1		M_FREF			M_SPD0	M_SPD1		R_A_TYP0	R_A_TYP1	R_A_TYP2		R_B_TYP0	R_B_TYP1	R_B_TYP2	L2_TYPE0	L2_TYPE1	L2_TYP2	L3_TYPE3	L2_PLL0	L2_PLL1	L2_PLL2	L2_PLL3			FLSHP0_	FLSHP1_	FLSHP2-			
OPER																																
RESET	X	X	1	X	1	1	X	X	1	X	X	X	1	X	X	X	X	X	X	X	X	X	X	X	1	1	X	X	X	1	1	1

M_SIZE[0:1] Memory Size. This field is encoded as follows:

M_SIZE[0:1]	Total Memory On Board
0b00	16 Megabytes
0b01	32 Megabytes
0b10	64 Megabytes
0b11	128 Megabytes

M_FREF Block A/B/C/D Fast Refresh. When this bit is set, it indicates that a DRAM block requires faster refresh rate. If any of the four blocks requires faster refresh rate then the **ram ref** control bit should be set.

M_SPD[0:1] Memory Speed. This field relays the memory speed information as follows:

M_SPD[0:1]	DRAM Speed	DRAM Type
0b00	70ns	Past Page
0b01	60ns	Fast Page
0b10	Reserved	Reserved
0b11	50ns	EDO

These two bits reflect the combined status of the four blocks of DRAM. Initialization software uses this information to program the **ram_spd0** and **ram_spd1** control bits in the Falcon's Chip Revision Register.

R_A/B_TYP[0:2] ROM/Flash Type. This field is encoded as follows:

ROM_A/B_TYP[0:2]	ROM/FLASH Type
0b000 to 0b101	Reserved
0b110	Intel 16-bit wide FLASH with 16K Bottom Boot Block
0b111	Unknown type (i.e. ROM/FLASH Sockets)

Note: The device width is different from the width of the FLASH bank. If the bank width is 64-bit and the device width is 16-bit then the FLASH bank consists of four FLASH devices.

L2_TYPE[0:3] L2 Memory Type. This field is encoded as follows:

L2_TYPE[0:3]	Configuration
0b0000	Late write Sync
0b0001	Pipelined Sync Burst
0b0010 to 0B1111	Reserved

L2_PLL[0:3] L2 Core Frequency to L2 Frequency Divider. This field is encoded as follows:

PLL Value]	Size
0b0000	Disable
0b0001	1
0b0010	1.5
0b0011	2
0b0100	2.5
0b0101	3
0b0110 to 0B1111	Reserved

FLSHP[0:2]_ Bank A Flash memory size. This field is encoded as follows:

Flash Size	FLSHP0_	FLSHP1_	FLSHP2_
1MB	0	0	0
2MB	0	0	1
4MB	0	1	0
8MB	0	1	1
16MB	1	0	0
32MB	1	0	1
64MB	1	1	0
No Flash	1	1	1

System External Cache Control Register (SXCCR)

The MVME2300 series does not implement this register. Writes to this register location ($FEF88000) will have no system effects. Reads from this register location will return undefined data.

Processor 0 External Cache Control Register (P0XCCR)

The MVME2300 series does not implement this register. Writes to this register location ($FEF88100) will have no system effects. Reads from this register location will return undefined data.

Processor 1 External Cache Control Register (P1XCCR)

The MVME2300 series does not implement this register. Writes to this register location ($FEF88200) will have no system effects. Reads from this register location will return undefined data.

CPU Control Register

The CPU Control Register is accessed via the RD[32:39] data lines of the upper Falcon device. This 8-bit register is defined as follows:

REG	CPU Control Register - $FEF88300							
BIT	0	1	2	3	4	5	6	7
FIELD		LEMODE		P0_TBEN				
OPER	R	R	R	R/W	R	R	R	R
RESET	1	0	0	1	X	X	X	X

LEMODE Little Endian Mode. This bit must be set in conjunction with the LEND bit in the Raven for little-endian mode.

P0_TBEN Processor 0 Time Base Enable. When this bit is cleared, the TBEN pin of the processor will be driven low.

ISA Local Resource Bus

W83C553 PIB Registers

The PIB contains ISA Bridge I/O registers for various functions. These registers are actually accessible from the PCI bus. Refer to the W83C553 Data Book for details.

16550 UART

The 16550 UART provides the MVME2300 series with an asynchronous serial port. Refer to the 16550 Data Sheet for additional details and programming information.

The following table shows the mapping of the 16550 registers within the MVME2300 series's ISA I/O space beginning at address 0x3f8:

Table 1-16. 16550 Access Registers

ISA I/O Address	Function
0000 02f8	Receiver Buffer (Read); Transmitter Holding (Write)
0000 -03f9	Interrupt Enable
0000 03fa	Interrupt Identification (Read); FIFO Control (Write)
0000 03fb	Line Control
0000 03fc	MODEM control
0000 03fd	Line Status
0000 03fe	MODEM Status
0000 03ff	Scratch

General-Purpose Software-Readable Header (J17)

Header J17 provides eight readable jumpers. These jumpers can be read as a register at ISA I/O address $801 (hexadecimal). Bit 0 is associated with header pins 1 and 2; bit 7 is associated with pins 15 and 16. The bit values are read as a **0** when the jumper is installed, and as a **1** when the jumper is removed. The MVME230*x* is shipped from the factory with J17 set to all **0**s (jumpers on all pins), as shown in Figure 1-4.

The PowerPC firmware, PPCBug, reserves all bits, SRH0 to SRH7.

With the jumper installed between pins 3 and 4 (factory configuration), the debugger uses the current user setup/operation parameters in Flash. When the jumper is removed (making the bit a **1**), the debugger uses the default setup/operation parameters in NVRAM instead. Refer to the **ENV** command description in the *MVME2300-Series VME Processor Module Installation and Use* manual for the NVRAM defaults.

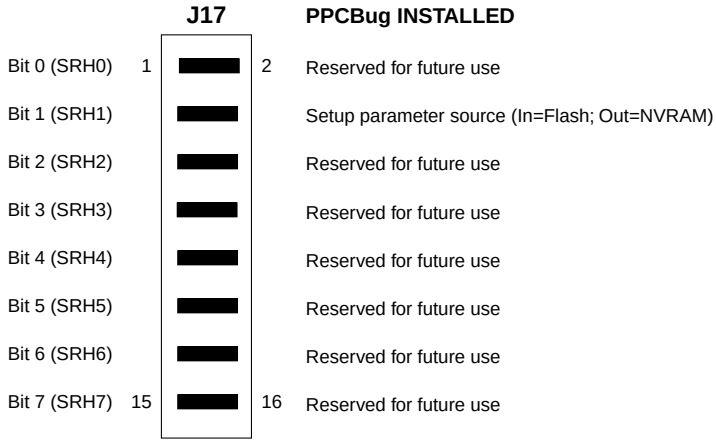

Figure 1-4. General-Purpose Software-Readable Header

NVRAM/RTC & Watchdog Timer Registers

The MK48T59/559 provides the MVME2300 series with 8K of non-volatile SRAM, a time-of-day clock, and a watchdog timer. Accesses to the MK48T59559 are accomplished via three registers: The NVRAM/RTC Address Strobe 0 Register, the NVRAM/RTC Address Strobe 1 Register, and the NVRAM/RTC Data Port Register. The NVRAM/RTC Address Strobe 0 Register latches the lower 8 bits of the address and the NVRAM/RTC Address Strobe 1 Register latches the upper 5 bits of the address.

Table 1-17. MK48T59/559 Access Registers

PCI I/O Address	Function
0000 0074	NVRAM/RTC Address Strobe 0 (A7 - A0)
0000 0075	NVRAM/RTC Address Strobe 1 (A15 - A8)
0000 0077	NVRAM/RTC Data Register

The NVRAM and RTC is accessed through the above three registers. When accessing a NVRAM/RTC location, follow the following procedure:

1. Write the low address (A7-A0) of the NVRAM to the NVRAM/RTC STB0 register,
2. Write the high address (A15-A8) of the NVRAM to the NVRAM/RTC STB1 register, and
3. Then read or write the NVRAM/RTC Data Port.

Refer to the MK48T59 Data Sheet for additional details and programming information.

Module Configuration and Status Registers

Four registers provide the configuration and status information about the board. These registers are listed in the following table:

Table 1-18. Module Configuration and Status Registers

PCI I/O Address	Function
0000 0800	CPU Configuration Register
0000 0802	Base Module Feature Register
0000 0803	Base Module Status Register
0000 08C0 - 0000 08C1	Seven-Segment Display Register

The following sub sections describe these registers in detail.

CPU Configuration Register

The CPU Configuration Register is an 8-bit register located at ISA I/O address x0800. This register is defined for the MVME2300 series to provide some backward compatibility with older MVME1600 products. The Base Module Status Register should be used to identify the base module type and the System Configuration Register should be used to obtain information about the overall system.

REG	Old CPU Configuration Register - $FE000800							
BIT	SD7	SD6	SD5	SD4	SD3	SD2	SD1	SD0
FIELD	CPUTYPE							
OPER	R				R			
RESET	$E				$F			

CPUTYPE CPU Type. This field will always read as $E for the MVME2300 series. (The whole register will read $EF.) The System Configuration Register should be used for additional information.

Base Module Feature Register

The Base Module Feature Register is an 8-bit register providing the configuration information about the MVME2300-series VME Processor Module. This read-only register is located at ISA I/O address x0802.

REG	Base Module Feature Register - Offset $0802							
BIT	SD7	SD6	SD5	SD4	SD3	SD2	SD1	SD0
FIELD	PCIXP_		PMC2P_	PMC1P_	VMEP_		LANP_	
OPER	R	R	R	R	R	R	R	R
RESET	X	1	X	X	X	1	X	1

PCIXP_ PCI Expansion Slot Present. If set, there is no PCIX device installed. If cleared, the PCIX slot contains a PCI Mezzanine Card.

PMC2P_ PMC Slot 2 Present. If set, there is no PCI Mezzanine Card installed in the PMC Slot 2. If cleared, the PMC Slot 2 contains a PMC.

PMC1P_ PMC Slot 1 Present. If set, there is no PCI Mezzanine Card installed in the PMC Slot 1. If cleared, the PMC Slot 1 contains a PMC.

VMEP_ VMEbus Present. If set, there is no VMEbus interface. If cleared, VMEbus interface is supported.

LANP_ Ethernet Present. If set, there is no Ethernet transceiver interface. If cleared, there is on-board Ethernet support.

Base Module Status Register (BMSR)

The Base Module Status Register is an 8-bit read-only register located at ISA I/O address x0803.

REG	Base Module Status Register - Offset $0803							
BIT	SD7	SD6	SD5	SD4	SD3	SD2	SD1	SD0
FIELD					BASE_TYPE			
OPER	R							
RESET	1	1	1	1	N/A			

BASE_TYPE Base Module Type. This four bit field is used to provide the category of the base module and is defined as follows:

BASE_TYPE Value	Base Module Type
$0 to $8	Reserved
$9	MVME2300
$A to $F	Reserved

Seven-Segment Display Register

Note This register is *NOT USED* on the MVME2300-series boards.

This 16-bit register allows data to be sent to the 4-digit hexadecimal diagnostic display. The register also allows the data to be read back.

REG	7-Segment Display Register - Offset $08C0															
BIT	SD15	SD14	SD13	SD12	SD11	SD10	SD9	SD8	SD7	SD6	SD5	SD4	SD3	SD2	SD1	SD0
FIELD	DIG3[3:0]				DIG2[3:0]				DIG1[3:0]				DIG0[3:0]			
OPER	R/W															
RESET	X	X	X	X	X	X	X	X	X	X	X	X	X	X	X	X

DIG3[3:0] Hexadecimal value of the most significant digit.

DIG2[3:0] Hexadecimal value of the third significant digit.

DIG1[3:0] Hexadecimal value of the second significant digit.

DIG0[3:0] Hexadecimal value of the least significant digit.

VME Registers

The following registers provide the following functions for the VMEbus interface: a software interrupt capability, a location monitor function, and a geographical address status. For these registers to be accessible from the VMEbus, the Universe ASIC must be programmed to map the VMEbus Slave Image 0 into the appropriate PCI I/O address range. Refer to the VMEbus Slave Map section for additional details. The following table shows the registers provided for various VME functions:

Table 1-19. VME Registers

PCI I/O Address	Function
0000 1000	SIG/LM Control Register
0000 1001	SIG/LM Status Register
0000 1002	VMEbus Location Monitor Upper Base Address
0000 1003	VMEbus Location Monitor Lower Base Address
0000 1004	VMEbus Semaphore Register 1
0000 1005	VMEbus Semaphore Register 2
0000 1006	VMEbus Geographical Address Status

These registers are described in the following sub-sections.

LM/SIG Control Register

The LM/SIG Control Register is an 8-bit register located at ISA I/O address x1000. This register provides a method to generate software interrupts. The Universe ASIC is programmed so that this register can be accessed from the VMEbus to generate software interrupts to the processor(s).

REG	LM/SIG Control Register - Offset $1000							
BIT	SD7	SD6	SD5	SD4	SD3	SD2	SD1	SD0
FIELD	SET SIG1	SET SIG0	SET LM1	SET LM0	CLR SIG1	CLR SIG0	CLR LM1	CLR LM0
OPER	WRITE-ONLY							
RESET	0	0	0	0	0	0	0	0

SET_SIG1 Writing a 1 to this bit will set the SIG1 status bit.

SET_SIG0 Writing a 1 to this bit will set the SIG0 status bit.

SET_LM1 Writing a 1 to this bit will set the LM1 status bit.

SET_LM0 Writing a 1 to this bit will set the LM0 status bit.

CLR_SIG1 Writing a 1 to this bit will clear the SIG1 status bit.

CLR_SIG0 Writing a 1 to this bit will clear the SIG0 status bit.

CLR_LM1 Writing a 1 to this bit will clear the LM1 status bit.

CLR_LM0 Writing a 1 to this bit will clear the LM0 status bit.

LM/SIG Status Register

The LM/SIG Status Register is an 8-bit register located at ISA I/O address x1001. This register, in conjunction with the LM/SIG Control Register, provides a method to generate interrupts. The Universe ASIC is programmed so that this register can be accessed from the VMEbus to provide a capability to generate software interrupts to the onboard processor(s) from the VMEbus.

REG	LM/SIG Status Register - Offset $1001							
BIT	SD7	SD6	SD5	SD4	SD3	SD2	SD1	SD0
FIELD	EN SIG1	EN SIG0	EN LM1	EN LM0	SIG1	SIG0	LM1	LM0
OPER	R/W				READ-ONLY			
RESET	0	0	0	0	0	0	0	0

EN_SIG1 When the EN_SIG1 bit is set, a LM/SIG Interrupt 1 is generated if the SIG1 bit is asserted.

EN_SIG0 When the EN_SIG0 bit is set, a LM/SIG Interrupt 0 is generated if the SIG0 bit is asserted.

EN_LM1 When the EN_LM1 bit is set, a LM/SIG Interrupt 1 is generated and the LM1 bit is asserted.

EN_LM0 When the EN_LM0 bit is set, a LM/SIG Interrupt 0 is generated and the LM0 bit is asserted.

SIG1 SIG1 status bit. This bit can only be set by the SET_LM1 control bit. It can only be cleared by a reset or by writing a 1 to the CLR_LM1 control bit.

SIG0 SIG0 status bit. This bit can only be set by the SET_LM0 control bit. It can only be cleared by a reset or by writing a 1 to the CLR_LM0 control bit.

LM1 LM1 status bit. This bit can be set by either the location monitor function or the SET_LM1 control bit. LM1 correspond to offset 3 from the location monitor base address. This bit can only be cleared by a reset or by writing a 1 to the CLR_LM1 control bit.

LM0 LM0 status bit. This bit can be set by either the location monitor function or the SET_LM0 control bit. LM0 correspond to offset 1 from the location monitor base address. This bit can only be cleared by a reset or by writing a 1 to the CLR_LM0 control bit.

Location Monitor Upper Base Address Register

The Location Monitor Upper Base Address Register is an 8-bit register located at ISA I/O address x1002. The Universe ASIC is programmed so that this register can be accessed from the VMEbus to provide VMEbus location monitor function.

REG	Location Monitor Upper Base Address Register - Offset $1002							
BIT	SD7	SD6	SD5	SD4	SD3	SD2	SD1	SD0
FIELD	VA15	VA14	VA13	VA12	VA11	VA10	VA9	VA8
OPER	R/W							
RESET	0	0	0	0	0	0	0	0

VA[15:8] Upper Base Address for the location monitor function.

Location Monitor Lower Base Address Register

The Location Monitor Lower Base Address Register is an 8-bit register located at ISA I/O address x1003. The Universe ASIC is programmed so that this register can be accessed from the VMEbus to provide VMEbus location monitor function.

REG	Location Monitor Lower Base Address Register - Offset $1003							
BIT	SD7	SD6	SD5	SD4	SD3	SD2	SD1	SD0
FIELD	VA7	VA6	VA5	VA4	LMEN			
OPER	R/W					R	R	R
RESET	0	0	0	0	0	0	0	0

VA[7:4] Lower Base Address for the location monitor function.

LMEN This bit must be set to enable the location monitor function.

Semaphore Register 1

The Semaphore Register 1 is an 8-bit register located at ISA I/O address x1004. The Universe ASIC is programmed so that this register can be accessible from the VMEbus. This register can only be updated if bit 7 is low or if the new value has the most significant bit cleared. When bit 7 is high, this register will not latch in the new value if the new value has the most significant bit set.

REG	Semaphore Register 1 - Offset $1004							
BIT	SD7	SD6	SD5	SD4	SD3	SD2	SD1	SD0
FIELD	SEM1							
OPER	R/W							
RESET	0	0	0	0	0	0	0	0

Semaphore Register 2

The Semaphore Register 2 is an 8-bit register located at ISA I/O address x1005. The Universe ASIC is programmed so that this register can be accessible from the VMEbus. This register can only be updated if bit 7 is low or if the new value has the most significant bit cleared. When bit 7 is high, this register will not latch in the new value if the new value has the most significant bit set.

REG	Semaphore Register 2 - Offset $1005							
BIT	SD7	SD6	SD5	SD4	SD3	SD2	SD1	SD0
FIELD	SEM2							
OPER	R/W							
RESET	0	0	0	0	0	0	0	0

VME Geographical Address Register (VGAR)

The VME Geographical Address Register is an 8-bit read-only register located at ISA I/O address x1006. This register reflects the states of the geographical address pins at the 5-row, 160-pin P1 connector.

REG	VME Geographical Address Register - Offset $1006							
BIT	SD7	SD6	SD5	SD4	SD3	SD2	SD1	SD0
FIELD			GAP#	GA4#	GA3#	GA2#	GA1#	GA0#
OPER	READ ONLY							
RESET	X	X	X	X	X	X	X	X

Emulated Z8536 CIO Registers and Port Pins

Although the MVME2300 series does not use a Z8536, there are several functions within this part that are emulated within an ISA Register PLD. These functions are accessed by reading/writing the Port A, B, C Data Registers and Control Register. Note that the Pseudo IACK function is not implemented in the MVME2300 series.

Emulated Z8536 Registers

The MVME2300 series implements the Z8536 CIO functions according to the following table.

Table 1-20. Emulated Z8536 Access Registers

PCI I/O Address	Function
0000 0844	Port C's Data Register
0000 0845	Port B's Data Register
0000 0846	Port A's Data Register
0000 0847	Control Register

Z8536 CIO Port Pins

The following table shows the signal function and port mapping for the Z8536 CIO emulation. The direction of these ports are fixed in hardware.

Table 1-21. Z8536 CIO Port Pins Assignment

Port Pin	Signal Name	Direction	Descriptions
PA0		I/O	Not used
PA1		I/O	Not used
PA2		I/O	Not used
PA3		I/O	Not used

Table 1-21. Z8536 CIO Port Pins Assignment (Continued)

Port Pin	Signal Name	Direction	Descriptions
PA4		I/O	Not used
PA5		I/O	Not used
PA6	BRDFAIL	Output	Board Fail: When set will cause BFL LED to be lit.
PA7		I/O	Not used
PB0		I/O	Not used
PB1		I/O	Not used
PB2		I/O	Not used
PB3		I/O	Not used
PB4		I/O	Not used
PB5		I/O	Not used
PB6		I/O	Not used
PB7	ABORT_	Input	Status of ABORT# signal
PC0		I/O	Not used
PC1		I/O	Not used
PC2	BASETYP0	Input	Genesis Base Module Type: 00b = Genesis II (see Base Module Status Register) 01b = MVME1600-011 10b = Reserved 11b = MVME1600-001
PC3	BASETYP1	Input	

ISA DMA Channels

The MVME2300 series does not implement any ISA DMA channels.

Raven PCI Host Bridge & Multi-Processor Interrupt Controller Chip

2

Introduction

Overview

This document describes the architecture and usage of the Raven, a PowerPC to PCI Local Bus Bridge ASIC. The Raven is intended to provide PowerPC 60*x* (MPC60*x)* compliant devices access to devices residing on the PCI Local Bus. In the remainder of this chapter, the MPC60x bus will be referred to as the MPC bus and the PCI Local Bus as PCI. PCI is a high performance 32-bit or 64-bit, burst mode, synchronous bus capable of transfer rates of 132 MByte/sec in 32-bit mode or 264 MByte/sec in 64-bit mode using a 33 MHz clock.

Features

- MPC Bus Interface
  - Direct interface to MPC603 or MPC604 processors.
  - 64-bit data bus, 32-bit address bus.
  - Four independent software programmable slave map decoders.
  - Multi-level write post FIFO for writes to PCI.
  - Support for MPC bus clock speeds up to 66 MHz.
  - Selectable big or little endian operation.
  - 3.3 V signal levels
- PCI Interface
  - Fully PCI Rev. 2.0 compliant.
  - 32-bit or 64-bit address/data bus.
  - Support for accesses to all four PCI address spaces.

  - Single-level write posting buffers for writes to the MPC bus.
  - Read-ahead buffer for reads from the MPC bus.
  - Four independent software programmable slave map decoders.

- Interrupt Controller
  - MPIC compliant.
  - Support for 16 external interrupt sources and two processors.
  - Multiprocessor interrupt control allowing any interrupt source to be directed to either processor.
  - Multilevel cross processor interrupt control for multiprocessor synchronization.
  - Four 31 bit tick timers.

- Two 64-bit general purpose registers for cross-processor messaging.

Block Diagram

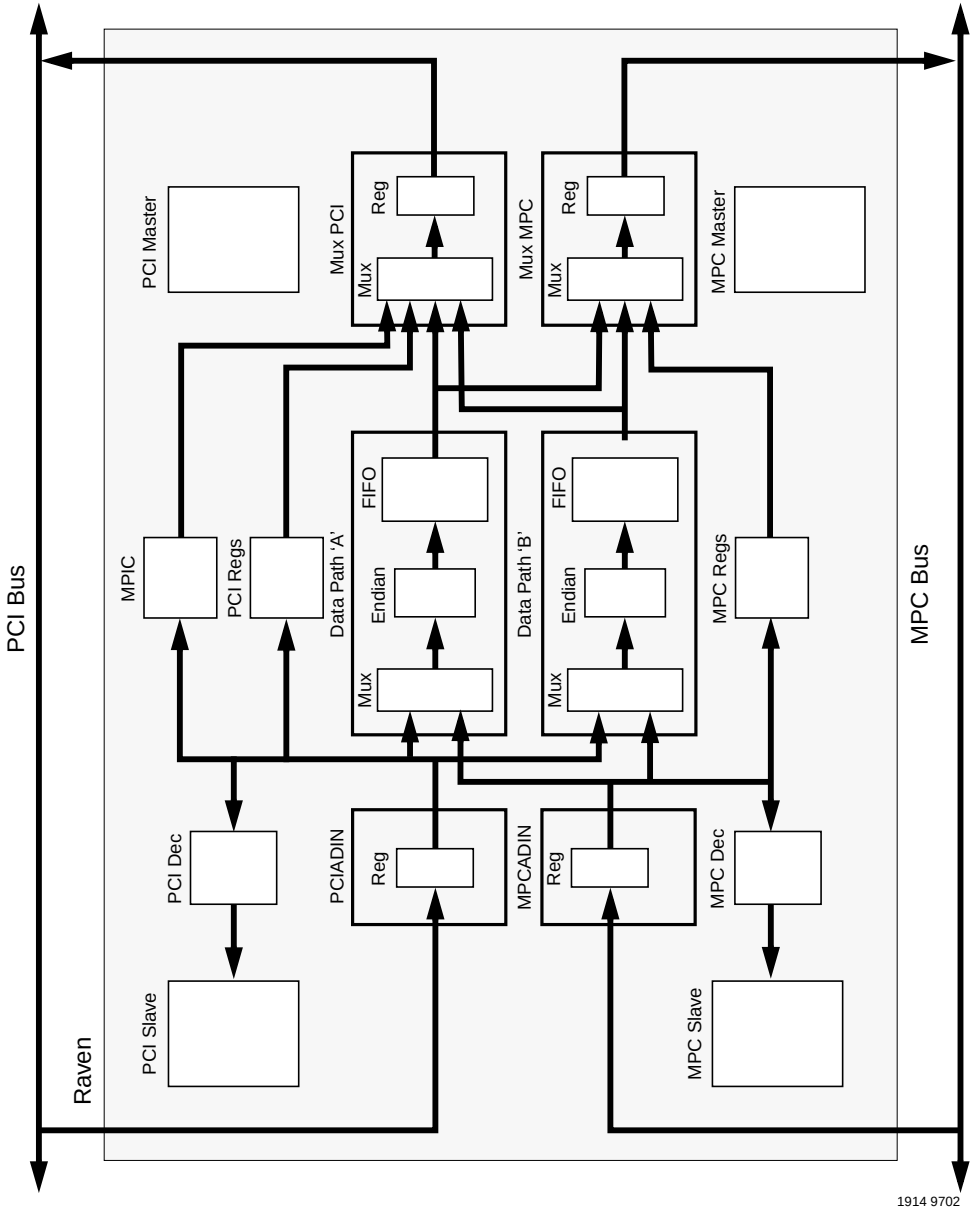

Figure 2-1. Raven Block Diagram

Functional Description

Architectural Overview

A functional block diagram of the Raven is shown in Figure 2-1. The Raven control logic is subdivided into the following functions: PCI slave, PCI master, MPC slave and MPC master. The Raven data path logic is subdivided into the following functions: Data Path 'A' FIFOs/muxes, Data Path 'B' FIFOs/muxes, PCIADIN, MPCADIN, Mux PCI, and Mux MPC. Address decoding is handled in the PCI Decode and MPC Decode blocks. The control register logic is contained in the PCI Registers and MPC Registers blocks. The interrupt controller (RavenMPIC) and the MPC arbiter functions make up the remainder of the Raven design.

The data path function imposes some restrictions on access to the RavenMPIC, the PCI Registers, and the MPC Registers. The RavenMPIC and the PCI Registers are only accessible to PCI-originated transactions. The MPC Registers are only accessible to MPC-originated transactions.

MPC Bus Interface

The MPC Bus Interface is designed to be coupled directly to up to two MPC603 or MPC604 microprocessors as well as a memory/cache subsystem. It uses a subset of the capabilities of the MPC60x bus protocol.

MPC Address Mapping

The Raven will map either PCI memory space or PCI I/O space into MPC address space using four programmable map decoders. These decoders provide windows into the PCI bus from the MPC bus. The most significant 16 bits of the MPC address are compared with the address range of each map decoder, and if the address falls within the specified range, the access is passed on to PCI. An example of this is shown in Figure 2-2.

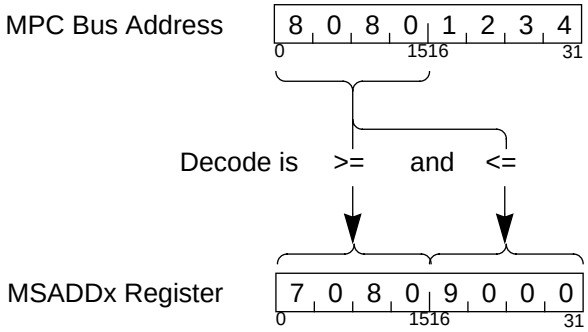

Figure 2-2. MPC to PCI Address Decoding

There are no limits imposed by Raven on how large of an address space a map decoder can represent. There is a lower limit of a minimum of 64 KBytes due to the resolution of the address compare logic.

For each map, there is an associated set of attributes. These attributes are used to enable read accesses, enable write accesses, enable write posting, and define the PCI transfer characteristics.

Each map decoder also includes a programmable 16-bit address offset. The offset is added to the 16 most significant bits of the MPC address, and the result is used as the PCI address. This offset allows PCI devices to reside at any PCI address, independent of the MPC address map. An example of this is shown in Figure 2-3.

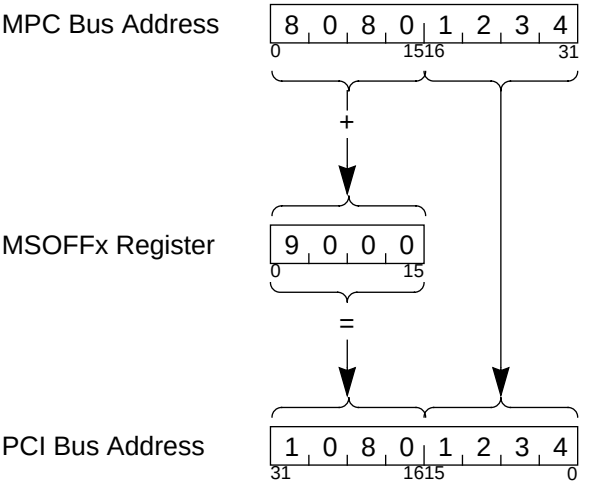

Figure 2-3. MPC to PCI Address Translation

Care should be taken to assure that all programmable decoders decode unique address ranges since overlapping address ranges will lead to undefined operation.

MPC Slave

The MPC slave provides the interface between the MPC bus and the Raven FIFOs. The MPC slave is responsible for tracking and maintaining coherency to the 60x processor bus protocol.

The MPC slave divides MPC command types into three categories: address only, write, and read. If a command type is an address only and the address presented at the time of the command is a valid Raven address, the MPC slave will respond immediately. The

Raven will not respond to address only cycles where the address presented is not a Raven address. The response of the MPC slave to command types is listed in Table 2-1.

Table 2-1. MPC Slave Response Command Types

MPC Transfer Type	Transfer Encoding	Transaction
Clean Block	00000	Addr Only
Flush Block	00100	Addr Only
SYNC	01000	Addr Only
Kill Block	01100	Addr Only
EIEIO	10000	Addr Only
ECOWX	10100	No Response
TLB Invalidate	11000	Addr Only
ECIWX	11100	No Response
LWARX	00001	Addr Only
STWCX	00101	Addr Only
TLBSYNC	01001	Addr Only
ICBI	01101	Addr Only
Reserved	1XX01	No Response
Write-with-flush	00010	Write
Write-with-kill	00110	Write
Read	01010	Read
Read-with-intent-to-modify	01110	Read
Write-with-flush-atomic	10010	Write
Reserved	10110	No Response
Read-atomic	11010	Read
Read-with-intent-to-modify-atomic	11110	Read
Reserved	00011	No Response
Reserved	00111	No Response
Read-with-no-intent-to-cache	01011	Read
Reserved	01111	No Response
Reserved	1xx11	No Response

MPC Write Posting

The MPC write FIFO stores up to eight data beats in any combination of single- and four-beat (burst) transactions. If write posting is enabled, Raven stores the data necessary to complete an MPC write transfer to the PCI bus and immediately acknowledges the transaction on the MPC bus. This frees the MPC bus from waiting for the potentially long PCI arbitration and transfer. The MPC bus may be used for more useful work while the Raven manages the completion of the write posted transaction on PCI.

All transactions will be completed on the PCI bus in the same order that they are completed on the MPC bus. A read or a compelled write transaction will force all previously issued write posted transactions to be flushed from the FIFO. All write posted transfers will be completed before a non-write posted read or write is begun, to assure that all transfers are completed in the order issued. All write posted transfers will also be completed before any access to the Raven's registers is begun.

MPC Master

The MPC master will attempt to move data using burst transfers wherever possible. A 64-bit by 16 entry FIFO is used to hold data between the PCI slave and the MPC master to ensure that optimum data throughput is maintained. While the PCI slave is filling the FIFO with one cache line worth of data, the MPC master can be moving another cache line worth onto the MPC bus. This will allow the PCI slave to receive long block transfers without stalling.

When programmed in "read ahead" mode (the RAEN bit in the PSATTx register is set) and the PCI slave receives a Memory Read Line or Memory Read Multiple command, the MPC master will fetch data in bursts and store it in the FIFO. The contents of the FIFO will then be used to attempt to satisfy the data requirements for the remainder of the PCI block transaction. If the data requested is not in the FIFO, the MPC master will read another cache line. The contents of the FIFO are "invalidated" at the end of each PCI block transaction.

Notes 1. Read ahead mode should not be used when data coherency may be a problem, as there is no way to snoop all MPC bus transactions and invalidate the contents of the FIFO.

2. Accesses near the top of local memory with read-ahead mode enabled could cause the MPC master to perform reads beyond the top of local memory which could result in an MPC bus timeout error.

The MPC bus transfer types generated by the MPC master depend on the PCI command code and the INV/GBL bits in the PSATTx registers. The GBL bit determines whether or not the GBL* signal is asserted for all portions of a transaction, and is fully independent of the PCI command code and INV bit. Table 2-2 shows the relationship between PCI command codes and the INV bit.

Table 2-2. MPC Transfer Types

PCI Command Code	INV	MPC Transfer Type	MPC Transfer Size	TT0-TT4
Memory Read Memory Read Multiple Memory Read Line	0	Read	Burst/Single Beat	01010
Memory Read Memory Read Multiple Memory Read Line	1	Read With Intent to Modify	Burst/Single Beat	01110
Memory Write Memory Write and Invalidate	x	Write with Kill	Burst	00110
Memory Write Memory Write and Invalidate	x	Write with Flush	Single Beat	00010

The MPC master incorporates an optional operating mode called Bus Hog. When Bus Hog is enabled, the MPC master will continually request the MPC bus for the entire duration of each PCI transfer. When Bus Hog is not enabled, the MPC master will

structure its bus request actions according to the requirements of the FIFO. Caution should be exercised when using this mode since the over-generosity of bus ownership to the MPC master can be detrimental to the host CPU's performance. The Bus Hog mode can be controlled by the BHOG bit within the GCSR. The default state for BHOG is disabled.

MPC Arbiter

The MPC Arbiter is an optional feature in the Raven, and is not used on the MVME2300 series. Arbitration for the MPC bus on the MVME2300 series is performed external to the Raven.

MPC Bus Timer

The MPC bus timer allows the current bus master to recover from a lock-up condition caused when no slave responds to the transfer request.

The time-out length of the bus timer is determined by the MBT field in the Global Control/Status Register.

The bus timer starts ticking at the beginning of an address transfer (TS* asserted), and if the address transfer is not terminated (AACK* asserted) before the time-out period has passed, the Raven will assert the MATO bit in the MPC Error Status Register, latch the MPC address in the MPC Error Address Register, and then terminate the cycle.

The MATO bit may be configured to generate an interrupt or a machine check through the MEREN register.

The timer is disabled if the transfer is intended for PCI. PCI bound transfers will be timed by the PCI master.

PCI Interface

The Raven PCI Interface is designed to connect directly to a PCI Local Bus, and supports Master and Target transactions within Memory space, I/O Space, and Configuration Space.

The PCI interface may operate at any clock speed up to 33 MHz. The PCLK input must be externally synchronized with the MCLK input, and the frequency of the PCLK input must be exactly half the frequency of the MCLK input.

PCI Address Mapping

Raven provides three resources to PCI:

- Configuration registers mapped into PCI Configuration space
- MPC bus address space mapped into PCI Memory space
- RavenMPIC control registers mapped into either PCI I/O space or PCI Memory space

Configuration Registers:

The Raven does not have an IDSEL pin. An internal connection is made within the Raven that logically associates the assertion of IDSEL with the assertion of AD31.

Raven provides a configuration space that is fully compliant with the PCI Local Bus Specification 2.0 definition for configuration space. There are two base registers within the standard 64 byte header that are used to control the mapping of RavenMPIC. One register is dedicated to mapping RavenMPIC into PCI I/O space, and the other register is dedicated to mapping RavenMPIC into PCI Memory space. The mapping of MPC address space is handled by device specific registers located above the 64 byte header. These control registers support a mapping scheme that is functionally similar to the PCI-to-MPC mapping scheme described in the section on *MPC Address Mapping* earlier in this chapter.

MPC Bus Address Space:

The Raven will map MPC address space into PCI Memory space using four programmable map decoders. The most significant 16 bits of the PCI address is compared with the address range of each

map decoder, and if the address falls within the specified range, the access is passed on to the MPC bus. An example of this is shown in Figure 2-4.

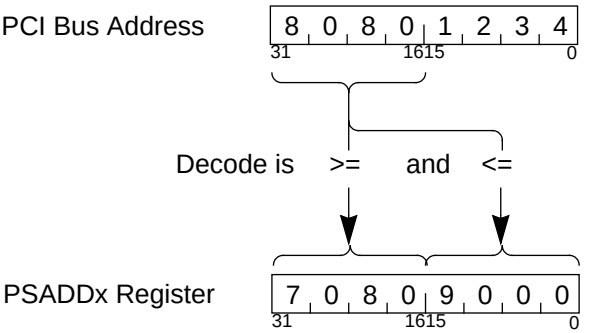

Figure 2-4. PCI to MPC Address Decoding

There are no limits imposed by Raven on how large of an address space a map decoder can represent. There is a lower limit of a minimum of 64 KBytes due to the resolution of the address compare logic.

For each map, there is an independent set of attributes. These attributes are used to enable read accesses, enable write accesses, enable write posting, and define the MPC bus transfer characteristics.

Each map decoder also includes a programmable 16-bit address offset. The offset is added to the 16 most significant bits of the PCI address, and the result is used as the MPC address. This offset allows devices to reside at any MPC address, independent of the PCI address map. An example of this is shown in Figure 2-5.

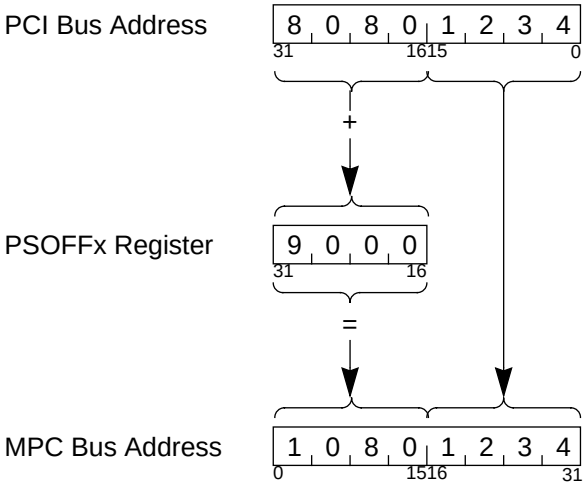

Figure 2-5. PCI to MPC Address Translation

All Raven address decoders are prioritized so that programming multiple decoders to respond to the same address is not a problem. When the PCI address falls into the range of more than one decoder, only the highest priority one will respond. The decoders are prioritized as shown below.

Decoder	Priority
PCI Slave 0	highest
PCI Slave 1	
PCI Slave 2	
PCI Slave 3	lowest

RavenMPIC Control Registers:

The RavenMPIC control registers are located within either PCI Memory or PCI I/O space using traditional PCI defined base registers within the predefined 64-byte header. Please see the section on *Raven Interrupt Controller Implementation* for more information.

PCI Slave

The PCI slave provides the control logic needed to interface the PCI bus to Raven's FIFOs. The PCI slave can accept either 32-bit or 64-bit transactions, however it can only accept 32-bit addressing. There is no limit to the length of the transfer that the slave can handle. During posted write cycles, the slave will continue to accept write data until the write post FIFO is full. If the write post FIFO is full, the slave will hold off the master with wait states until there is more room in the FIFO. The slave will not initiate a disconnect. If the write transaction is compelled, the slave will hold off the master with wait states while each beat of data is being transferred. The slave will acknowledge the completion of the transfer only after the data transfer has successfully completed on the MPC bus. If a read transaction is being performed within an address space marked for prefetching, the slave (in conjunction with the MPC master) will attempt to read ahead far enough on the MPC bus to allow for an uninterrupted burst transaction on the PCI bus. Read transactions within address spaces marked for no prefetching will be acknowledged on the PCI bus only after a single beat read has successfully completed on the MPC bus. Each read on the MPC bus will only be started after the previous read has been acknowledged on the PCI bus and there is an indication that the PCI master wishes for more data to be transferred.

The following paragraphs identify some associations between the operation of the PCI slave and the PCI 2.0 Local Bus Specification requirements.

Command Types:

Table 2-3 shows which types of PCI cycles the slave has been designed to accept.

Table 2-3. PCI Slave Response Command Types

Command Type	Slave Response?
Interrupt Acknowledge	No
Special Cycle	No
I/O Read	Yes
I/O Write	Yes
Reserved	No
Reserved	No
Memory Read	Yes
Memory Write	Yes
Reserved	No
Reserved	No
Configuration Read	Yes
Configuration Write	Yes
Memory Read Multiple	Yes
Dual Address Cycle	No
Memory Read Line	Yes
Memory Write and Invalidate	Yes

Addressing:

The slave will accept any combination of byte enables during read or write cycles. During write cycles, a discontinuity (i.e., a 'hole') in the byte enables will force the slave to issue a disconnect. During all read cycles, the slave will return an entire word of data regardless of the byte enables. During I/O read cycles, the slave will perform integrity checking of the byte enables against the address being presented and assert SERR* in the event there is an error.

The slave will only honor the Linear Incrementing addressing mode. The slave will perform a disconnect with data if any other mode of addressing is attempted.

Device Selection:

The PCI slave will always respond valid decoded cycles as a medium responder.

Target Initiated Termination:

The PCI slave normally strives to complete transactions without issuing disconnects or retries. One exception is where the slave is performing configuration cycles. All configuration cycles will be terminated with a disconnect after one data beat has been transferred. Another exception is the issue of a disconnect when asked to perform a transaction with byte enable 'holes'.

Fast Back-to-Back Transactions:

The PCI slave supports both of the fundamental target requirements for fast back-to-back transactions. The PCI slave meets the first criteria of being able to successfully track the state of the PCI bus without the existence of an IDLE state between transactions. The second criteria associate with signal turn-around timing is met by default since the slave functions as a medium responder.

Latency:

The PCI slave does not have any hardware mechanisms in place to guarantee that the initial and subsequent target latency requirements are met. Typically this is not a problem since the bandwidth of the MPC bus far exceeds the bandwidth of the PCI bus. The Raven MPC arbiter has been designed to give the highest priority for its own transactions which further reduces PCI bus latency.

Exclusive Access:

The PCI slave has no mechanism to support exclusive access.

Parity:

The PCI slave supports address parity error detection, data parity generation and data parity error detection.

Cache Support:

The PCI slave does not participate in the PCI caching protocol.

PCI Write Posting

If write posting is enabled, the Raven stores the target address, attributes, and up to 128 bytes of data from one PCI write transaction and immediately acknowledges the transaction on the PCI bus. This allows the slower PCI to continue to transfer data at its maximum bandwidth, and the faster MPC bus to accept data in high performance cache-line burst transfers.

Only one PCI transaction may be write posted at any given time. If the Raven is busy processing a previous write posted transaction when a new PCI transaction begins, the next PCI transaction will be delayed (TRDY* will not be asserted) until the previous transaction has completed. If during a transaction the write post buffer gets full, subsequent PCI data transfers will be delayed (TRDY* will not be asserted) until the Raven has removed some data from the FIFO. Under normal conditions, the Raven should be able to empty the FIFO faster than the PCI bus can fill it.

PCI Configuration cycles intended for internal Raven registers will also be delayed if Raven is busy so that control bits which may affect write posting do not change until all write posted transactions have completed.

PCI Master

The PCI master, in conjunction with the capabilities of the MPC slave, will attempt to move data in either single beat or four-beat (burst) transactions. All single beat transactions will be subdivided into one or two 32-bit transfers, depending on the alignment and size of the transaction. The PCI master will attempt to transfer all four-beat transactions in 64-bit mode if the PCI bus has 64-bit mode

enabled. If at any time during the transaction the PCI target indicates it can not support 64-bit mode, the PCI master will continue to transfer the remaining data in 32-bit mode.

The PCI master can support Critical Word First (CWF) burst transfers. The PCI master will divide this transaction into two parts. The first part will start on the address presented with the CWF transfer request and continue up to the end of the current cache line. The second transfer will start at the beginning of the associated cache line and work its way up to (but not including) the word addressed by the CWF request.

It should be noted that even though the master can support burst transactions, a majority of the transaction types handled are single-beat transfers. Typically PCI space is not configured as cache-able, therefore burst transactions to PCI space would not naturally occur. It must be supported since it is conceivable that bursting could happen. For example, nothing prevents the processor from loading up a cache line with PCI write data and manually flushing the cache line.

The following paragraphs identify some associations between the operation of the PCI master and the PCI 2.0 Local Bus Specification requirements.

Command Types:

The PCI Command Codes generated by the PCI master depend on the type of transaction being performed on the MPC bus. Please refer to the section on the *MPC Slave* earlier in this chapter for a

further description of MPC bus read and MPC bus write. Table 2-4 summarizes the command types supported and how they are generated.

Table 2-4. PCI Master Command Codes

Entity Addressed	MPC Transfer Type	TBST*	MEM	C/BE	PCI Command
PIACK	Read	x	x	0000	Interrupt Acknowledge
CONADD/CONDAT	Write	x	x	0001	Special Cycle
MPC Mapped PCI Space	Read	x	0	0010	I/O Read
	Write	x	0	0011	I/O Write
-- Unsupported --				0100	Reserved
-- Unsupported --				0101	Reserved
MPC Mapped PCI Space	Read	1	1	0110	Memory Read
	Write	x	1	0111	Memory Write
-- Unsupported --				1000	Reserved
-- Unsupported --				1001	Reserved
CONADD/CONDAT	Read	x	x	1010	Configuration Read
CONADD/CONDAT	Write	x	x	1011	Configuration Write
-- Unsupported --				1100	Memory Read Multiple
-- Unsupported --				1101	Dual Address Cycle
MPC Mapped PCI Space	Read	0	1	1110	Memory Read Line
-- Unsupported --				1111	Memory Write and Invalidate

Addressing:

The PCI master will generate all memory transactions using the linear incrementing addressing mode.

Combining, Merging, and Collapsing:

The PCI master does not participate in any of these protocols.

Master Initiated Termination:

The PCI master can handle any defined method of target retry, target disconnect, or target abort. If the target responds with a retry, the PCI master will wait for the required two clock periods and attempt the transaction again. This will continue indefinitely until the transaction has completed, the transaction is aborted by the target, or if the transaction is aborted due to a Raven detected bridge lock. The same happens if the target responds with a disconnect and there is still data to be transferred.

If the PCI master detects a target abort during a read, any untransferred read data will be filled with ones. If the PCI master detects a target abort during a write, any untransferred portions of data will be dropped. The same rule applies if the PCI master generates a Master Abort cycle.

Arbitration:

The PCI master can support parking on the PCI bus. If the PCI master starts a transaction that is going to take more than one beat, the PCI master will continuously assert its request until the transaction has completed. The one exception is when the PCI master receives a disconnect or a retry.

Fast Back-to-Back Transactions:

The PCI master does not generate fast back-to-back transactions.

Arbitration Latency:

Because a bulk of the transactions are limited to single-beat transfers on PCI, the PCI master does not implement a Master Latency Timer.

Exclusive Access:

The PCI master is not able to initiate exclusive access transactions.

Address/Data Stepping:

The PCI master does not participate in the Address/Data Stepping protocol.

Parity:

The PCI master supports address parity generation, data parity generation, and data parity error detection.

Cache Support:

The PCI master does not participate in the PCI caching protocol.

Generating PCI Cycles

There are four basic types of bus cycles that can be generated on the PCI bus:

- Memory and I/O
- Configuration
- Special Cycle
- Interrupt Acknowledge

Generating PCI Memory and I/O Cycles

Each programmable slave may be configured to generate PCI I/O or memory accesses through the MEM and IOM fields in its Attribute register as shown below.

MEM	IOM	PCI Cycle Type
1	x	Memory
0	0	Contiguous I/O
0	1	Spread I/O

If the MEM bit is set, the Raven will perform Memory addressing on the PCI bus. The Raven will take the MPC bus address, apply the offset specified in the MSOFFx register, and map the result directly to the PCI bus.

The IBM CHRP specification describes two approaches for handling PCI I/O addressing: contiguous or spread address modes. When the MEM bit is cleared, the IOM bit is used to select between these two modes whenever a PCI I/O cycle is to be performed.

The Raven will perform contiguous I/O addressing when the MEM bit is clear and the IOM bit is clear. The Raven will take the MPC address, apply the offset specified in the MSOFFx register, and map the result directly to PCI.

The Raven will perform spread I/O addressing when the MEM bit is clear and the IOM bit is set. The Raven will take the MPC address, apply the offset specified in the MSOFFx register, and map the result to PCI as shown in Figure 2-6.

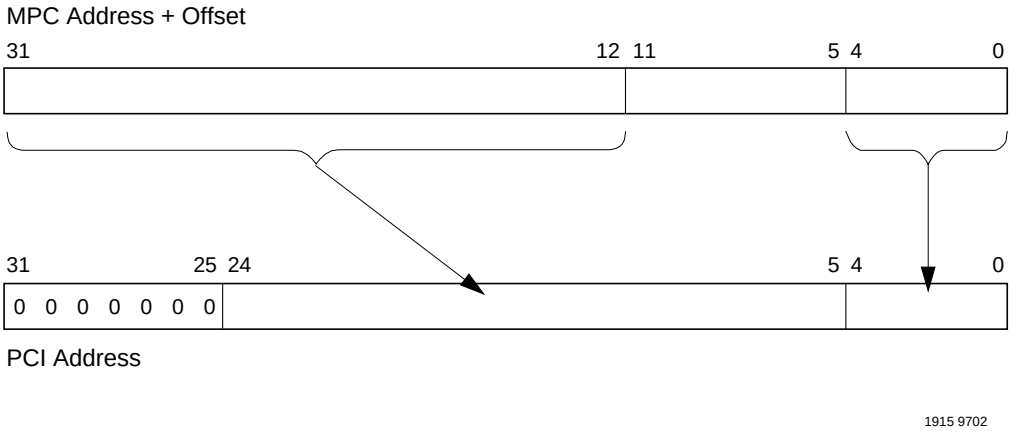

Figure 2-6. PCI Spread I/O Address Translation

Spread I/O addressing allows each PCI device's I/O registers to reside on a different MPC memory page, so device drivers can be protected from each other using memory page protection.

All I/O accesses must be performed within natural word boundaries. Any I/O access that is not contained within a natural word boundary will result in unpredictable operation. For example, an I/O transfer of four bytes starting at address $80000010 is considered a valid transfer. An I/O transfer of four bytes starting at address $80000011 is considered an invalid transfer since it crosses the natural word boundary at address $80000013/$80000014.

Generating PCI Configuration Cycles

The Raven uses configuration mechanism #1 as defined in the PCI Local Bus Specification 2.0 to generate configuration cycles. Please refer to this specification for a complete description of this function.

Configuration mechanism #1 uses an address register/data register format. Performing a configuration access is a two step process. The first step is to place the address of the configuration cycle within the CONFIG_ADDRESS register. Note that this action does not generate any cycles on the PCI bus. The second step is to either read or write configuration data into the CONFIG_DATA register. If the CONFIG_ADDRESS register has been set up correctly, the Raven will pass this access on to the PCI bus as a configuration cycle.

The addresses of the CONFIG_ADDRESS and CONFIG_DATA registers are actually embedded within PCI I/O space. If the CONFIG_ADDRESS register has been set incorrectly or the access to either the CONFIG_ADDRESS or CONFIG_DATA register is not 1,2, or 4 bytes wide, the Raven will pass the access on to PCI as a normal I/O Space transfer.

The CONFIG_ADDRESS register is located at offset $CF8 from the bottom of PCI I/O space. The CONFIG_DATA register is located at offset $CFC from the bottom of PCI I/O space. The Raven address decode logic has been designed such that MSADD3 and MSOFF3 must be used for mapping to PCI Configuration (consequently I/O) space. The MSADD3/MSOFF3 register group is initialized at reset to allow PCI I/O access starting at address $80000000. The

powerup location (i.e., Little Endian disabled) of the CONFIG_ADDRESS register is $80000CF8, and the CONFIG_DATA register is located at $80000CFC.

The CONFIG_ADDRESS register must be prefilled with four fields: the Register Number, the Function Number, the Device Number, and the Bus Number.

The Register Number and the Function Number get passed along to the PCI bus as portion of the lower address bits.

When performing a configuration cycle, Raven uses the upper 20 address bits as IDSEL lines. During the address phase of a configuration cycle, only one of the upper address bits will be set. The device that has its IDSEL connected to the address bit being asserted will be selected for a configuration cycle. Raven decodes the Device Number to determine which of the upper address lines to assert. The decoding of the five-bit Device Number is show as follows:.

Device Number	Address Bit
00000	AD31
00001 - 01010	All Zeros
01011	AD11
01100	AD12
(etc.)	(etc.)
11101	AD29
11110	AD30
11111	All Zeros

The Bus Number determines which bus is the target for the configuration read cycle. Raven will always host PCI bus #0. Accesses that are to be performed on the PCI bus connected to the Raven must have zero programmed into the Bus Number. If the configuration access is targeted for another PCI bus, then that bus number should be programmed into the Bus Number field. The Raven will detect a non-zero field and convert the transaction to a Type 1 Configuration cycle.

Generating PCI Special Cycles

Raven supports the method stated in PCI Local Bus Specification 2.0 using Configuration Mechanism #1 to generate special cycles. To prime Raven for a special cycle, the host processor must write a 32 bit value to the CONFIG_ADDRESS register. The contents of the write are defined later in this chapter under the CONFIG_ADDRESS register definition. After the write to CONFIG_ADDRESS has been accomplished, the next write to the CONFIG_DATA register causes the Raven to generate a special cycle on the PCI bus. The write data is driven onto AD[31:0] during the special cycle's data phase.

Generating PCI Interrupt Acknowledge Cycles

Performing a read from the PIACK register will initiate a single PCI Interrupt Acknowledge cycle. Any single byte or combination of bytes may be read from, and the actual byte enable pattern used during the read will be passed on to the PCI bus. Upon completion of the PCI interrupt acknowledge cycle, the Raven will present the resulting vector information obtained from the PCI bus as read data.

Endian Conversion

The Raven supports both Big- and Little-Endian data formats. Since the PCI bus is inherently Little-Endian, conversion is necessary if all MPC devices are configured for Big-Endian operation. The Raven may be programmed to perform the Endian conversion described below.

When MPC Devices are Big-Endian

When all MPC devices are operating in Big-Endian mode, all data to/from the PCI bus must be swapped such that the PCI bus looks big endian from the MPC bus's perspective. This association is true regardless of whether the transaction originates on the PCI bus or the MPC bus. This is shown in Figure 2-7.

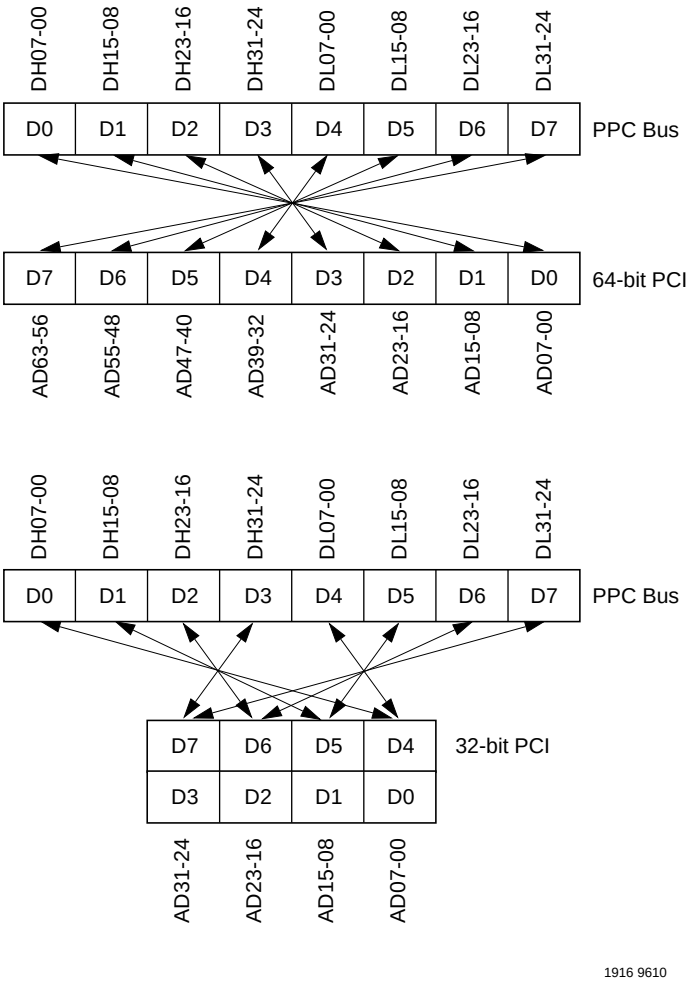

Figure 2-7. Big to Little Endian Data Swap

When MPC Devices are Little Endian

When all MPC devices are operating in little endian mode, the originating address is modified to remove the exclusive-ORing applied by MPC60x processors before being passed on to the PCI bus. Note that no data swapping is performed. Address modification happens to the originating address regardless of whether the transaction originates from the PCI bus or the MPC

bus. The three low order address bits are exclusive-ORed with a three-bit value that depends on the length of the operand, as shown in Table 2-5.

Table 2-5. Address Modification for Little Endian Transfers

Data Length (bytes)	Address Modification
1	XOR with 111
2	XOR with 110
4	XOR with 100
8	no change

Note The only legal data lengths supported in little endian mode are 1, 2, 4, or 8-byte aligned transfers.

Since this method has some difficulties dealing with unaligned PCI-originated transfers, the Raven MPC master will break up all unaligned PCI transfers into multiple aligned PCI transfers into multiple aligned transfers on the MPC bus.

Raven Registers

The Raven registers are not sensitive to changes in Big-Endian and Little-Endian mode. With respect to the MPC bus (but not always the address internal to the processor), the MPC registers are always represented in Big-Endian mode. This means that the processor's internal view of the MPC registers will appear different depending on which mode the processor is operating in.

With respect with the PCI bus, the RavenMPIC registers and the configuration registers are always represented in Little-Endian mode.

The CONFIG_ADDRESS and CONFIG_DATA registers are actually represented in PCI space to the processor and are subject to the Endian functions. For example, the powerup location of the

CONFIG_ADDRESS register with respect to the MPC bus is $80000cf8 when Raven is in Big-Endian mode. When Raven is switched to Little-Endian mode, the CONFIG_ADDRESS register with respect to the MPC bus is $80000cfc. Note that in both cases the address generated internal to the processor will be $80000cf8.

The contents of the CONFIG_ADDRESS register are not subject to the Endian function.

The data associated with PIACK accesses is subject to the Endian swapping function. The address of a PIACK cycle is undefined, therefore address modification during Little-Endian mode is not an issue.

Error Handling

The Raven will be capable of detecting and reporting the following errors to one or more MPC masters:

- MPC address bus time-out
- PCI master signalled master abort
- PCI master received target abort
- PCI parity error
- PCI system error

Each of these error conditions will cause an error status bit to be set in the MPC Error Status Register. If a second error is detected while any of the error bits is set, the OVFL bit is asserted, but none of the error bits are changed. Each bit in the MPC Error Status Register may be cleared by writing a 1 to it; writing a 0 to it has no effect. New error bits may be set only when all previous error bits have been cleared.

When any bit in the MPC Error Status register is set, the Raven will attempt to latch as much information as possible about the error in the MPC Error Address and Attribute Registers. Information is saved as follows:

Error Status	Error Address and Attributes
MATO	From MPC bus
SMA	From PCI bus
RTA	From PCI bus
PERR	Invalid
SERR	Invalid

Each MERST error bit may be programmed to generate a machine check and/or a standard interrupt. The error response is programmed through the MPC Error Enable Register on a source by source basis. When a machine check is enabled, either the MID field in the MPC Error Attribute Register or the DFLT bit in the MEREN Register determine the master to which the machine check is directed. For errors in which the master who originated the transaction can be determined, the MID field is used, provided the MID is%00 (processor 0), %01 (processor 1), or %10 (processor 2). For errors not associated with a particular MPC master, or associated with masters other than processor 0,1 or 2, the DFLT bit is used. One example of an error condition which cannot be associated with a particular MPC master would be a PCI system error.

Transaction Ordering

Raven supports transaction ordering with an optional FIFO flushing option. The FLBRD (Flush Before Read) bit within the GCSR register controls the flushing of PCI write posted data when performing MPC-originated read transactions.

When the FLBRD bit is set, Raven will handle read transactions originating from the MPC bus in the following manner:

- Write posted transactions originating from the processor bus are flushed by the nature of the FIFO architecture. The Raven

will hold the processor with wait states until the PCI bound FIFO is empty.

- Write posted transactions originated from the PCI bus are flushed whenever the PCI slave has accepted a write-posted transaction and the transaction has not completed on the MPC bus.

Registers

This chapter provides a detailed description of all Raven registers. These registers are broken into two groups: the MPC Registers and the PCI Configuration Registers. The MPC Registers are accessible only from the MPC bus using any valid transfer size. The PCI Configuration Registers reside in PCI configuration space. They are accessible from the MPC bus through the Raven. The MPC Registers are described first; the PCI Configuration Registers are described next. A complete discussion of the RavenMPIC registers can be found later in this chapter.

The following conventions are used in the Raven register charts:

- R — Read Only field.
- R/W — Read/Write field.
- S — Writing a ONE to this field sets this field.
- C — Writing a ONE to this field clears this field.

MPC Registers

The Raven MPC register map is shown in Table 2-6.

Table 2-6. Raven MPC Register Map

Bit --->	0	1	2	3	4	5	6	7	8	9	10	11	12	13	14	15	16	17	18	19	20	21	22	23	24	25	26	27	28	29	30	31
$FEFF0000	VENID																DEVID															
$FEFF0004									REVID																							
$FEFF0008	GCSR																FEAT															
$FEFF000C																	MARB															
$FEFF0010																									PADJ							
$FEFF0014																																
$FEFF0018																																
$FEFF001C																																
$FEFF0020																	MEREN															

Table 2-6. Raven MPC Register Map (Continued)

Bit --->	0	1	2	3	4	5	6	7	8	9	10	11	12	13	14	15	16	17	18	19	20	21	22	23	24	25	26	27	28	29	30	31
$FEFF0024																									MERST							
$FEFF0028	MERAD																															
$FEFF002C																	MERAT															
$FEFF0030	PIACK																															
$FEFF0034																																
$FEFF0038																																
$FEFF003C																																
$FEFF0040	MSADD0																															
$FEFF0044	MSOFF0																								MSATT0							
$FEFF0048	MSADD1																															
$FEFF004C	MSOFF1																								MSATT1							
$FEFF0050	MSADD2																															
$FEFF0054	MSOFF2																								MSATT2							
$FEFF0058	MSADD3																															
$FEFF005C	MSOFF3																								MSATT3							
$FEFF0060																																
$FEFF0064																																
$FFEF0068																																
$FEFF006C																																
$FEFF0070	GPREG0(Upper)																															
$FEFF0074	GPREG0(Lower)																															
$FEFF078	GPREG1(Upper)																															
$FEFF07C	GPREG1(Lower)																															

Vendor ID/Device ID Registers

Address	$FEFF0000																															
Bit	0	1	2	3	4	5	6	7	8	9	10	11	12	13	14	15	16	17	18	19	20	21	22	23	24	25	26	27	28	29	30	31
Name	VENID																DEVID															
Operation	R																R															
Reset	$1057																$4801															

VENID **Vendor ID.** This register identifies the manufacturer of the device. This identifier is allocated by the PCI SIG to ensure uniqueness. $1057 has been assigned to Motorola. This register is duplicated in the PCI Configuration Registers.

DEVID **Device ID.** This register identifies this particular device. The Raven will always return $4801. This register is duplicated in the PCI Configuration Registers.

Revision ID Register

Address	$FEFF0004																															
Bit	0	1	2	3	4	5	6	7	8	9	10	11	12	13	14	15	16	17	18	19	20	21	22	23	24	25	26	27	28	29	30	31
Name									REVID																							
Operation	R								R								R								R							
Reset	$00								$02								$00								$00							

REVID **Revision ID.** This register identifies the Raven revision level. This register is duplicated in the PCI Configuration Registers.

General Control-Status/Feature Registers

Address	$FEFF0008																															
Bit	0	1	2	3	4	5	6	7	8	9	10	11	12	13	14	15	16	17	18	19	20	21	22	23	24	25	26	27	28	29	30	31
Name	GCSR																FEAT															
	LEND				BHOG	FLBRD	MBT1	MBT0	P64	MARB	MPIC				MID1	MID0		EXT14	EXT13	EXT12	EXT11	EXT10	EXT09	EXT08	EXT07	EXT06	EXT05	EXT04	EXT03	EXT02	EXT01	EXT00
Operation	R/W	R	R	R	R/W	R/W	R/W	R/W	R	R	R	R	R	R	R	R	R	R	R	R	R	R	R	R	R	R	R	R	R	R	R	R
Reset	0	0	0	0	0	0	0	0	0	0	0	0	0	0	0	0	0	0/1	0/1	0/1	0/1	0/1	0/1	0/1	0/1	0/1	0/1	0/1	0/1	0/1	0/1	0/1

LEND **Endian Select.** If set, the MPC bus is operating in little endian mode. The MPC address will be modified as described in the section *When MPC Devices are Little Endian*. When LEND is clear, the MPC bus is operating in big endian mode, and all data to/from PCI is swapped as described in the section *When MPC Devices are Big-Endian*.

FLBRD **Flush Before Read.** If set, the Raven will guarantee that all PCI initiated posted write transactions will be completed before any MPC initiated read transactions will be allowed to complete. When FLBRD is clear, there will be no correlation between these transaction types and their order of completion. Please refer to the section on *PCI/MPC Contention Handling* for more information.

BHOG **Bus Hog.** If set, the Raven MPC master will operate in the Bus Hog mode. Bus Hog mode means the MPC master will continually request the MPC bus for the entire duration of each PCI transfer. If Bus Hog is not enabled, the MPC master will request the bus in a normal manner. Please refer to the section on *MPC Master* for more information.

MBTx **MPC Bus Time-out.** This field specifies the MPC bus time-out length. The time-out length is encoded as follows:

MBT	Time Out Length
00	**256 µsec**
01	64 µsec
10	8 µsec
11	disabled

P64 **64-bit PCI Mode Enable.** If set, the Raven is connected to a 64-bit PCI bus. This bit is set if REQ64* is asserted on the rising edge of RESET*.

MARB **MPC Arbiter Enable.** If set, the Raven internal MPC Arbiter is enabled. This bit is set if CPUID is %111 on the rising edge of RESET*.

MPIC **Multi-Processor Interrupt Controller Enable.** If set, the Raven internal MPIC interrupt controller is enabled. This bit is set if EXT15 is high on the rising edge of RESET*. If cleared, Raven detected errors will be passed on to processor 0 INT pin.

MIDx **Master ID.** This field is encoded as shown below to indicate who is currently the MPC bus master. When the internal MPC arbiter is enabled (MARB is set), these bits are controlled by the internal arbiter. When the internal arbiter is disabled (MARB is clear) these bits reflect the status of the CPUID pins. In a multi- processor environment, these bits allow software to determine on which processor it is currently running. The internal MPC arbiter encodes this field as follows:

MID	Current MPC Data Bus Master
00	device on ABG0*
01	device on ABG1*
10	device on ABG2
11	Raven

FEAT **Feature Register.** Each bit in this register reflects the state of one of the external interrupt input pins on the rising edge of RESET*. This register may be used to report hardware configuration parameters to

system software.

MPC Arbiter Control Register

Address	$FEFF000C																															
Bit	0	1	2	3	4	5	6	7	8	9	10	11	12	13	14	15	16	17	18	19	20	21	22	23	24	25	26	27	28	29	30	31
Name																	MARB															
																						BREN2	BREN1	BREN0	PKEN	PKMD	GLMD	BAMD			DEFM1	DEFM0
Operation	R								R								R	R	R	R	R	R/W	R/W	R/W	R/W	R/W	R/W	R/W	R	R	R/W	R/W
Reset	$00								$00								0	0	0	0	0	1	1	1	0	0	0	1	0	0	1	1

This register is not used by the MVME2300 series.

Prescaler Adjust Register

Address	$FEFF0010																															
Bit	0	1	2	3	4	5	6	7	8	9	10	11	12	13	14	15	16	17	18	19	20	21	22	23	24	25	26	27	28	29	30	31
Name																									PADJ							
Operation	R								R								R								R/W							
Reset	$00								$00								$00								$B4							

PADJ **Prescaler Adjust.** This register is used to specify a scale factor for the prescaler to ensure that the time base for the bus timer is 1 MHz. The scale factor is calculated as follows:

PADJ = 256 - Clk,

where Clk is the frequency of the CLK input in MHz. This register should be written with the value $BE indicating a 66MHz MPC bus.

MPC Error Enable Register

Address	$FEFF0020																															
Bit	0	1	2	3	4	5	6	7	8	9	10	11	12	13	14	15	16	17	18	19	20	21	22	23	24	25	26	27	28	29	30	31
Name																	MEREN															
																		DFLT	MATOM		PERRM	SERRM	SMAM	RTAM			MATOII		PERRI	SERRI	SMAI	RTAI
Operation	R								R								R	R/W	R/W	R	R/W	R/W	R/W	R/W	R	R	R/W	R	R/W	R/W	R/W	R/W
Reset	$00								$00								0	0	0	0	0	0	0	0	0	0	0	0	0	0	0	0

DFLT **Default MPC Master ID.** This bit determines which MCHK* pin will be asserted for error conditions in which the MPC master ID can not be determined or the Raven was the MPC master. For example, in event of a PCI parity error for a transaction in which the Raven's PCI master was not involved, the MPC master ID can not be determined. When DFLT is set, MCHK1* is used. When DFLT is clear, MCHK0* will be used.

MATOM **MPC Address Bus Time-out Machine Check Enable.** When this bit is set, the MATO bit in the MERST register will be used to assert the MCHK output to the current address bus master. When this bit is clear, MCHK will not be asserted.

PERRM **PCI Parity Error Machine Check Enable.** When this bit is set, the PERR bit in the MERST register will be used to assert the MCHK output to bus master 0. When this bit is clear, MCHK will not be asserted.

SERRM **PCI System Error Machine Check Enable.** When this bit is set, the SERR bit in the MERST register will be used to assert the MCHK output to bus master 0. When this bit is clear, MCHK will not be asserted.

SMAM **PCI Signalled Master Abort Machine Check Enable.** When this bit is set, the SMA bit in the MERST register will be used to assert the MCHK output to the bus master which initiated the transaction. When this bit is clear, MCHK will not be asserted.

RTAM **PCI Master Received Target Abort Machine Check Enable.**When this bit is set, the RTA bit in the MERST register will be used to assert the MCHK output to the bus master which initiated the transaction. When this bit is clear, MCHK will not be asserted.

MATOI **MPC Address Bus Time-out Interrupt Enable.**When this bit is set, the MATO bit in the MERST register will be used to assert an interrupt through the MPIC interrupt controller. When this bit is clear, no interrupt will be asserted.

PERRI **PCI Parity Error Interrupt Enable.**When this bit is set, the PERR bit in the MERST register will be used to assert an interrupt through the MPIC interrupt controller. When this bit is clear, no interrupt will be asserted.

SERRI **PCI System Error Interrupt Enable.**When this bit is set, the PERR bit in the MERST register will be used to assert an interrupt through the MPIC interrupt controller. When this bit is clear, no interrupt will be asserted.

SMAI **PCI Master Signalled Master Abort Interrupt Enable.**When this bit is set, the SMA bit in the MERST register will be used to assert an interrupt through the MPIC interrupt controller. When this bit is clear, no interrupt will be asserted.

RTAI **PCI Master Received Target Abort Interrupt Enable.** When this bit is set, the RTA bit in the MERST register will be used to assert an interrupt through the MPIC interrupt controller. When this bit is clear, no interrupt will be asserted.

MPC Error Status Register

Address	$FEFF0024																															
Bit	0	1	2	3	4	5	6	7	8	9	10	11	12	13	14	15	16	17	18	19	20	21	22	23	24	25	26	27	28	29	30	31
Name																									MERST							
																									OVF		MATO		PERR	SERR	SMA	RTA
Operation	R								R								R								R/C	R	R/C	R	R/C	R/C	R/C	R/C
Reset	$00								$00								$00								0	0	0	0	0	0	0	0

OVF **Error Status Overflow.** This bit is set when any error is detected and any of the error status bits are already set. It may be cleared by writing a 1 to it; writing a 0 to it has no effect.

MATO **MPC Address Bus Time-out.** This bit is set when the MPC address bus timer times out. It may be cleared by writing it to a 1; writing it to a 0 has no effect. When the MATOM bit in the MEREN register is set, the assertion of this bit will assert MCHK to the master designated by the MID field in the MERAT register. When the MATOI bit in the MEREN register is set, the assertion of this bit will assert an interrupt through the MPIC interrupt controller.

PERR **PCI Parity Error.** This bit is set when the PCI PERR* pin is asserted. It may be cleared by writing it to a 1; writing it to a 0 has no effect. When the PERRM bit in the MEREN register is set, the assertion of this bit

will assert MCHK to the master designated by the DFLT bit in the MERAT register. When the PERRI bit in the MEREN register is set, the assertion of this bit will assert an interrupt through the MPIC interrupt controller.

SERR **PCI System Error.** This bit is set when the PCI SERR* pin is asserted. It may be cleared by writing it to a 1; writing it to a 0 has no effect. When the SERRM bit in the MEREN register is set, the assertion of this bit will assert MCHK to the master designated by the DFLT bit in the MERAT register. When the SERRI bit in the MEREN register is set, the assertion of this bit will assert an interrupt through the MPIC interrupt controller.

SMA **PCI Master Signalled Master Abort.** This bit is set when the PCI master signals master abort to terminate a PCI transaction. It may be cleared by writing it to a 1; writing it to a 0 has no effect. When the SMAM bit in the MEREN register is set, the assertion of this bit will assert MCHK to the master designated by the MID field in the MERAT register. When the SMAI bit in the MEREN register is set, the assertion of this bit will assert an interrupt through the MPIC interrupt controller.

RTA **PCI Master Received Target Abort.** This bit is set when the PCI master receives target abort to terminate a PCI transaction. It may be cleared by writing it to a 1; writing it to a 0 has no effect. When the RTAM bit in the MEREN register is set, the assertion of this bit will assert MCHK to the master designated by the MID field in the MERAT register. When the RTAI bit in the MEREN register is set, the assertion of this bit will assert an interrupt through the MPIC interrupt controller.

MPC Error Address Register

Address	$FEFF0028																															
Bit	0	1	2	3	4	5	6	7	8	9	10	11	12	13	14	15	16	17	18	19	20	21	22	23	24	25	26	27	28	29	30	31
Name	MERAD																															
Operation	R																															
Reset	$00000000																															

MERAD **MPC Error Address.** This register captures the MPC address when the MATO bit is set in the MERST register. It captures the PCI address when the SMA or RTA bits are set in the MERST register. Its contents are not defined when the PERR or SERR bits are set in the MERST register.

MPC Error Attribute Register - MERAT

If the PERR or SERR bits are set in the MERST register, the contents of the MERAT register are zero. If the MATO bit is set the register is defined by the following figure:

Address	$FEFF002C																															
Bit	0	1	2	3	4	5	6	7	8	9	10	11	12	13	14	15	16	17	18	19	20	21	22	23	24	25	26	27	28	29	30	31
Name																	MERAT															
																			MID1	MID0				TBST	TSIZ0	TSIZ1	TSIZ2	TT0	TT1	TT2	TT3	TT4
Operation	R								R								R	R	R	R	R	R	R	R	R	R	R	R	R	R	R	R
Reset	$00								$00								0	0	0	0	0	0	0	0	0	0	0	0	0	0	0	0

MIDx **MPC Master ID.** This field contains the ID of the MPC master which originated the transfer in which the error occurred. The encoding scheme is identical to that used in the GCSR register.

TBST **Transfer Burst.** This bit is set when the transfer in which the error occurred was a burst transfer.

TSIZx **Transfer Size.** This field contains the transfer size of the MPC transfer in which the error occurred.

TTx **Transfer Type.** This field contains the transfer type of the MPC transfer in which the error occurred.

If the SMA or RTA bit are set the register is defined by the following figure:

Address	$FEFF002C																															
Bit	0	1	2	3	4	5	6	7	8	9	10	11	12	13	14	15	16	17	18	19	20	21	22	23	24	25	26	27	28	29	30	31
Name																	MERAT															
																	WP		MID1	MID0	COMM3	COMM2	COMM1	COMM0	BYTE7	BYTE6	BYTE5	BYTE4	BYTE3	BYTE2	BYTE1	BYTE0
Operation	R								R								R	R	R	R	R	R	R	R	R	R	R	R	R	R	R	R
Reset	$00								$00								0	0	0	0	0	0	0	0	0	0	0	0	0	0	0	0

WP **Write Post Completion.** This bit is set when the PCI master detects an error while completing a write post transfer.

MIDx **MPC Master ID.** This field contains the ID of the MPC master which originated the transfer in which the error occurred. The encoding scheme is identical to that used in the GCSR register

COMMx **PCI Command.** This field contains the PCI command of the PCI transfer in which the error occurred.

BYTEx **PCI Byte Enable.** This field contains the PCI byte enables of the PCI transfer in which the error occurred. A set bit designates a selected byte.

PCI Interrupt Acknowledge Register

Address	$FEFF0030																															
Bit	0	1	2	3	4	5	6	7	8	9	10	11	12	13	14	15	16	17	18	19	20	21	22	23	24	25	26	27	28	29	30	31
Name	PIACK																															
Operation	R																															
Reset	$00000000																															

PIACK **PCI Interrupt Acknowledge.** Performing a read from this register will initiate a single PCI Interrupt Acknowledge cycle. Any single byte or combination of bytes may be read from, and the actual byte enable pattern used during the read will be passed on to the PCI bus. Upon completion of the PCI interrupt acknowledge cycle, the Raven will present the resulting vector information obtained from the PCI bus as read data.

MPC Slave Address (0,1 and 2) Registers

Address	MSADD0 - $FEFF0040 MSADD1 - $FEFF0048 MSADD2 - $FEFF0050																															
Bit	0	1	2	3	4	5	6	7	8	9	10	11	12	13	14	15	16	17	18	19	20	21	22	23	24	25	26	27	28	29	30	31
Name	MSADDx																															
	START																END															
Operation	R/W																R/W															
Reset	$0000																$0000															

To initiate a PCI cycle from the MPC bus, the MPC address must be greater than or equal to the START field and less than or equal to the END field.

START **Start Address.** This field determines the start address of a particular memory area on the MPC bus which will be used to access PCI bus resources. The value of this field will be compared with the upper 16 bits of the incoming MPC address.

END **End Address.** This field determines the end address of a particular memory area on the MPC bus which will be used to access PCI bus resources. The value of this field will be compared with the upper 16 bits of the incoming MPC address.

MPC Slave Address (3) Register

Address	MSADD3 - $FEFF0058																															
Bit	0	1	2	3	4	5	6	7	8	9	10	11	12	13	14	15	16	17	18	19	20	21	22	23	24	25	26	27	28	29	30	31
Name	MSADD3																															
	START																END															
Operation	R/W																R/W															
Reset	$8000																$8080															

MSADD3, MSOFF3 and MSATT3 represent the only register group which can be used to initiate access to the PCI Configuration Address ($80000CF8) and Configuration Data ($80000CFC) registers. Note that this implies that MSxxx3 also represents the generation of PCI Special Cycles. The power up default values of MSADD3, MSOFF3 and MSATT3 are set to allow access to PCI configuration space without MPC register initialization. Please see the description of the MSOFF3/MSATT3 Registers for additional information.

To initiate a PCI cycle from the MPC bus the MPC address must be greater than or equal to the START field and less than or equal to the END field.

START **Start Address.** This field determines the start address of a particular memory area on the MPC bus which will be used to access PCI bus resources. The value of this field will be compared with the upper 16 bits of the incoming MPC address.

END **End Address.** This field determines the end address of a particular memory area on the MPC bus which will be used to access PCI bus resources. The value of this field will be compared with the upper 16 bits of the incoming MPC address.

MPC Slave Offset/Attribute (0,1 and 2) Registers

Address	MSOFF0/MSATT0 - $FEFF0044 MSOFF1/MSATT1 - $FEFF004C MSOFF2/MSATT2 - $FEFF0054																														
Bit	0	1	2	3	4	5	6	7	8	9	10	11	12	13	14	15	16	17	18	19	20	21	22	23	24	25	26	27	28	29	30	31
Name	MSOFFx																								MSATTx							
																									REN	WEN		WPEN			MEM	IOM
Operation	R/W																R								R/W	R/W	R	R/W	R	R	R/W	R/W
Reset	$0000																$00								0	0	0	0	0	0	0	0

MSOFFx **MPC Slave Offset.** This register contains a 16-bit offset that is added to the upper 16 bits of the MPC address to determine the PCI address used for transfers from the MPC bus to PCI. This offset allows PCI resources to reside at addresses that would not normally be visible from the MPC bus.

REN **Read Enable.** If set, the corresponding MPC slave is enabled for read transactions.

WEN **Write Enable.** If set, the corresponding MPC slave is enabled for write transactions.

WPEN **Write Post Enable.** If set, write posting is enabled for the corresponding MPC slave.

MEM **PCI Memory Cycle.** If set, the corresponding MPC slave will generate transfers to or from PCI memory space. When clear, the corresponding MPC slave will generate transfers to or from PCI I/O space using the addressing mode defined by the IOM field.

IOM **PCI I/O Mode.** If set, the corresponding MPC slave will generate PCI I/O cycles using spread addressing as defined in the section on *Generating PCI Memory and I/O Cycles*. When clear, the corresponding MPC slave will generate PCI I/O cycles using contiguous addressing. This field only has meaning when the MEM bit is clear.

MPC Slave Offset/Attribute (3) Registers

Address	MSOFF3/MSATT3 - $FEFF005C																															
Bit	0	1	2	3	4	5	6	7	8	9	10	11	12	13	14	15	16	17	18	19	20	21	22	23	24	25	26	27	28	29	30	31
Name	MSOFF3																								MSATT3							
																									REN	WEN		WPEN				IOM
Operation	R/W																R								R/W	R/W	R	R/W	R	R	R	R/W
Reset	$8000																$00								1	1	0	0	0	0	0	0

MSOFF3 **MPC Slave Offset.** This register contains a 16-bit offset that is added to the upper 16 bits of the MPC address to determine the PCI address used for transfers from the MPC bus to PCI. This offset allows PCI resources to reside at addresses that would not normally be visible from the MPC bus. It is initialized to $8000 to facilitate a zero-based access to PCI space.

REN **Read Enable.** If set, the corresponding MPC slave is enabled for read transactions.

WEN **Write Enable.** If set, the corresponding MPC slave is enabled for write transactions.

WPEN **Write Post Enable.** If set, write posting is enabled for the corresponding MPC slave.

IOM **PCI I/O Mode.** If set, the corresponding MPC slave will generate PCI I/O cycles using spread addressing as defined in the section on *Generating PCI Memory and I/O Cycles*. When clear, the corresponding MPC slave will generate PCI I/O cycles using contiguous addressing.

General Purpose Registers

Address	GPREG0 (Upper) - $FEFF0070 GPREG0 (Lower) - $FEFF0074 GPREG1 (Upper) - $FEFF0078 GPREG1 (Lower) - $FEFF007C																															
Bit	0	1	2	3	4	5	6	7	8	9	10	11	12	13	14	15	16	17	18	19	20	21	22	23	24	25	26	27	28	29	30	31
Name	GPREGx																															
Operation	R/W																															
Reset	$00000000																															

These general purpose read/write registers are provided for inter-process message passing or general purpose storage. They do not control any hardware.

PCI Registers

The PCI Configuration Registers are compliant with the configuration register set described in the PCI Local Bus Specification, Revision 2.0. The CONFIG_ADDRESS and CONFIG_DATA registers described in this section are accessed within PCI I/O space.

All write operations to reserved registers will be treated as no-ops. That is, the access will be completed normally on the bus and the data will be discarded. Read accesses to reserved or unimplemented registers will be completed normally and a data value of 0 returned.

The Raven PCI Configuration Register map is shown in Table 2-7. The Raven PCI I/O Register map is shown in Table 2-8.

Table 2-7. Raven PCI Configuration Register Map

31 30 29 28 27 26 25 24	23 22 21 20 19 18 17 16	15 14 13 12 11 10 9 8	7 6 5 4 3 2 1 0	<--- Bit
DEVID		VENID		$00
PSTAT		PCOMM		$04
CLASS			REVID	$08
				$0C
IOBASE				$10
MEMBASE				$14
				$18 - $7F
PSADD0				$80
PSOFF0			PSATT0	$84
PSADD1				$88
PSOFF1			PSATT1	$8C
PSADD2				$90
PSOFF2			PSATT2	$94
PSADD3				$98
PSOFF3			PSATT3	$9C

Table 2-8. Raven PCI I/O Register Map

31 30 29 28 27 26 25 24	23 22 21 20 19 18 17 16	15 14 13 12 11 10 9 8	7 6 5 4 3 2 1 0	<--- Bit
CONFIG_ADDRESS				$CF8
CONFIG_DATA				$CFC

Vendor ID/ Device ID Registers

Offset	$00																															
Bit	31	30	29	28	27	26	25	24	23	22	21	20	19	18	17	16	15	14	13	12	11	10	9	8	7	6	5	4	3	2	1	0
Name	DEVID																VENID															
Operation	R																R															
Reset	$4801																$1057															

VENID **Vendor ID.** This register identifies the manufacturer of the device. This identifier is allocated by the PCI SIG to ensure uniqueness. $1057 has been assigned to Motorola. This register is duplicated in the MPC Registers.

DEVID **Device ID.** This register identifies the particular device. The Raven will always return $4801. This register is duplicated in the MPC Registers.

PCI Command/ Status Registers

Offset	$04																															
Bit	31	30	29	28	27	26	25	24	23	22	21	20	19	18	17	16	15	14	13	12	11	10	9	8	7	6	5	4	3	2	1	0
Name	PSTAT																PCOMM															
	RCVPE	SIGSE	RCVMA	RCVTA	SIGTA	SELTIM1	SELTIM0	DPAR	FAST														SERR		PERR				MSTR	MEMSP	IOSP	
Operation	R/C	R/C	R/C	R/C	R/C	R	R	R/C	R	R	R	R	R	R	R	R	R	R	R	R	R	R	R	R/W	R	R/W	R	R	R	R/W	R/W	R/W
Reset	0	0	0	0	0	0	1	0	1	0	0	0	0	0	0	0	0	0	0	0	0	0	0	0	0	0	0	0	0	1	0	0

IOSP **IO Space Enable.** If set, the Raven will respond to PCI I/O accesses when appropriate. If cleared, the Raven will not respond to PCI I/O space accesses.

MEMSP **Memory Space Enable.** If set, the Raven will respond to PCI memory space accesses when appropriate. If cleared, the Raven will not respond to PCI memory space accesses.

MSTR **Bus Master Enable.** If set, the Raven may act as a master on PCI. If cleared, the Raven may not act as a PCI master.

PERR **Parity Error Response.** If set, the Raven will check parity on all PCI transfers. If cleared, the Raven will ignore any parity errors that it detects and continue normal operation.

SERR **System Error Enable.** This bit enables the SERR* output pin. If clear, the Raven will never drive SERR*. If set, the Raven will drive SERR* active when a system error is detected.

FAST **Fast Back-to-Back Capable.** This bit indicates that the Raven is capable of accepting fast back-to-back transactions with different targets.

DPAR **Data Parity Detected.** This bit is set when three conditions are met: 1) the Raven asserted PERR* itself or observed PERR* asserted; 2) the Raven was the PCI master for the transfer in which the error occurred; 3) the PERR bit in the PCI Command Register is set. This bit is cleared by writing it to 1; writing a 0 has no effect.

SELTIM **DEVSEL Timing.** This field indicates that the Raven will always assert DEVSEL* as a ‘medium’ responder.

SIGTA **Signalled Target Abort.** This bit is set by the PCI slave whenever it terminates a transaction with a target-abort. It is cleared by writing it to 1; writing a 0 has no effect.

RCVTA **Received Target Abort.** This bit is set by the PCI master whenever its transaction is terminated by a target-abort. It is cleared by writing it to 1; writing a 0 has no effect.

RCVMA **Received Master Abort.** This bit is set by the PCI master whenever its transaction (except for Special Cycles) is terminated by a master-abort. It is cleared by writing it to 1; writing a 0 has no effect.

SIGSE **Signaled System Error.** This bit is set whenever the Raven asserts SERR*. It is cleared by writing it to 1; writing a 0 has no effect.

RCVPE **Detected Parity Error.** This bit is set whenever the Raven detects a parity error, even if parity error checking is disabled (see bit PERR in the PCI Command Register). It is cleared by writing it to 1; writing a 0 has no effect.

Revision ID/ Class Code Registers

Offset	$08																															
Bit	31	30	29	28	27	26	25	24	23	22	21	20	19	18	17	16	15	14	13	12	11	10	9	8	7	6	5	4	3	2	1	0
Name	CLASS																								REVID							
Operation	R																								R							
Reset	$060000																								$02							

REVID **Revision ID.** This register identifies the Raven revision level. This register is duplicated in the MPC Registers.

CLASS **Class Code.** This register identifies Raven as the following:

Base Class Code	$06	PCI Bridge Device
Subclass Code	$00	PCI Host Bridge
Program Class Code	$00	Not Used

I/O Base Register

Offset	$10																															
Bit	31	30	29	28	27	26	25	24	23	22	21	20	19	18	17	16	15	14	13	12	11	10	9	8	7	6	5	4	3	2	1	0
Name	IOBASE																															
	IOBA																														RES	IO/MEM
Operation	R/W																R														R	R
Reset	$0000																$0000														0	1

This register controls the mapping of the MPIC control registers in PCI I/O space.

IO/MEM **IO Space Indicator.** This bit is hard-wired to a logic one to indicate PCI I/O space.

RES **Reserved**. This bit is hard-wired to zero.

IOBA **I/O Base Address.** These bits define the I/O space base address of the MPIC control registers. The IOBASE decoder is disabled when the IOBASE value is zero.

Memory Base Register

Offset	$14																															
Bit	31	30	29	28	27	26	25	24	23	22	21	20	19	18	17	16	15	14	13	12	11	10	9	8	7	6	5	4	3	2	1	0
Name	MEMBASE																															
	MEMBA																												PRE	MTYP1	MTYP0	IO/MEM
Operation	R/W																R												R	R	R	R
Reset	$0000																$0000												0	0	0	0

This register controls the mapping of the MPIC control registers in PCI memory space.

IO/MEM **IO Space Indicator.** This bit is hard-wired to a logic zero to indicate PCI memory space.

MTYPx **Memory Type**. These bits are hard-wired to zero to indicate that the MPIC registers can be located anywhere in the 32-bit address space

PRE **Prefetch**. This bit is hard-wired to zero to indicate that the MPIC registers are not prefetchable.

MEMBA **Memory Base Address.** These bits define the memory space base address of the MPIC control registers. The MBASE decoder is disabled when the MBASE value is zero.

PCI Slave Address (0,1,2 and 3) Registers

Offset	PSADD0 - $80 PSADD1 - $88 PSADD2 - $90 PSADD3 - $98																															
Bit	31	30	29	28	27	26	25	24	23	22	21	20	19	18	17	16	15	14	13	12	11	10	9	8	7	6	5	4	3	2	1	0
Name	PSADDx																															
	START																END															
Operation	R/W																R/W															
Reset	$0000																$0000															

To initiate an MPC cycle from the PCI bus the PCI address must be greater than or equal to the START field and less than or equal to the END field.

START **Start Address.** This field determines the start address of a particular memory area on the PCI bus which will be used to access MPC bus resources. The value of this field will be compared with the upper 16 bits of the incoming PCI address.

END **End Address.** This field determines the end address of a particular memory area on the PCI bus which will be used to access MPC bus resources. The value of this field will be compared with the upper 16 bits of the incoming PCI address.

PCI Slave Attribute/ Offset (0,1,2 and 3) Registers

Offset	PSATT0/PSOFF0 - $84 PSATT1/PSOFF1 - $8C PSATT2/PSOFF2 - $94 PSATT3/PSOFF3 - $9C																															
Bit	31	30	29	28	27	26	25	24	23	22	21	20	19	18	17	16	15	14	13	12	11	10	9	8	7	6	5	4	3	2	1	0
Name	PSOFFx																								PSATTx							
																									REN	WEN	WPEN	RAEN			GBL	INV
Operation	R/W																R								R/W	R/W	R/W	R/W	R	R	R/W	R/W
Reset	$0000																$00								0	0	0	0	0	0	0	0

INV **Invalidate Enable.** If set, the MPC master will issue a transfer type code which specifies the current transaction should cause an invalidate for each MPC transaction originated by the corresponding PCI slave. The transfer type codes generated are shown in Table 2-3.

GBL **Global Enable.** If set, the MPC master will assert the GBL* pin for each MPC transaction originated by the corresponding PCI slave.

RAEN **Read Ahead Enable.** If set, read ahead is enabled for the corresponding PCI slave.

WPEN **Write Post Enable.** If set, write posting is enabled for the corresponding PCI slave.

WEN **Write Enable.** If set, the corresponding PCI slave is enabled for write transactions.

REN **Read Enable.** If set, the corresponding PCI slave is enabled for read transactions.

PSOFFx **PCI Slave Offset.** This register contains a 16-bit offset that is added to the upper 16 bits of the PCI address to determine the MPC address used for transfers from PCI to the MPC bus. This offset allows MPC resources to reside at addresses that would not

normally be visible from PCI.

CONFIG_ADDRESS Register

The description of the CONFIG_ADDRESS register is presented in three perspectives: from the PCI bus, from the MPC Bus in Big Endian mode, and from the MPC bus in Little Endian mode. Note that the view from the PCI bus is purely conceptual, since there is no way to access the CONFIG_ADDRESS register from the PCI bus.

Conceptual perspective from the PCI bus:

Offset	$CFB								$CFA								$CF9								$CF8							
Bit	31	30	29	28	27	26	25	24	23	22	21	20	19	18	17	16	15	14	13	12	11	10	9	8	7	6	5	4	3	2	1	0
Name	CONFIG_ADDRESS																															
	EN								BUS								DEV				FUN				REG							
Operation	R/W	R							R/W								R/W				R/W				R/W						R	R
Reset	1	$00							$00								$00				$0				$00						0	0

Perspective from the MPC bus in Big Endian mode:

Offset	$CF8								$CF9								$CFA								$CFB							
Bit (DH)	0	1	2	3	4	5	6	7	8	9	10	11	12	13	14	15	16	17	18	19	20	21	22	23	24	25	26	27	28	29	30	31
Name	CONFIG_ADDRESS																															
	REG								DEV				FUN				BUS								EN							
Operation	R/W						R	R	R/W				R/W				R/W								R/W	R						
Reset	$00						0	0	$00				$0				$00								1	$00						

Perspective from the MPC bus in Little Endian mode:

Offset	$CFC								$CFD								$CFE								$CFF							
Bit (DL)	0	1	2	3	4	5	6	7	8	9	10	11	12	13	14	15	16	17	18	19	20	21	22	23	24	25	26	27	28	29	30	31
Name	CONFIG_ADDRESS																															
	EN								BUS								DEV				FUN				REG							

Offset	$CFC		$CFD	$CFE		$CFF		
Operation	R/W	R	R/W	R/W	R/W	R/W	R	R
Reset	1	$00	$00	$00	$0	$00	0	0

The register fields are defined as follows:

REG **Register Number.**

Configuration Cycles: Identifies a target double word within a target's configuration space. This field is copied to the PCI AD bus during the address phase of a Configuration cycle.

Special Cycles: This field must be written with all zeros.

FUN **Function Number.**

Configuration Cycles: Identifies a function number within a target's configuration space. This field is copied to the PCI AD bus during the address phase of a Configuration cycle.

Special Cycles: This field must be written with all ones.

DEV **Device Number.**

Configuration Cycles: Identifies a target's physical PCI device number. Refer to the section on *Generating PCI Cycles* for a description of how this field is encoded.

Special Cycles: This field must be written with all ones.

BUS **Bus Number.**

Configuration Cycles: Identifies a targeted bus number. If written with all zeros, a Type 0 Configuration Cycle will be generated. If written with any value other than all zeros, then a Type 1 Configuration Cycle will be generated.

Special Cycles: Identifies a targeted bus number. If written with all zeros, a Special Cycle will be generated. If written with any value other than all zeros, then a Special Cycle translated into a Type 1 Configuration Cycle will be generated.

EN **Enable.**

Configuration Cycles: Writing a one to this bit enables CONFIG_DATA to Configuration Cycle translation. If this bit is a zero, subsequent accesses to CONFIG_DATA will be passed though as I/O Cycles.

Special Cycles: Writing a one to this bit enables CONFIG_DATA to Special Cycle translation. If this bit is a zero, subsequent accesses to CONFIG_DATA will be passed though as I/O Cycles.

CONFIG_DATA Register

The description of the CONFIG_DATA register is also presented in three perspectives; from the PCI bus, from the MPC Bus in Big Endian mode, and from the MPC bus in Little Endian mode. Note that the view from the PCI bus is purely conceptual, since there is no way to access the CONFIG_DATA register from the PCI bus.

Conceptual perspective from the PCI bus:

Offset	$CFF								$CFE								$CFD								$CFC							
Bit	31	30	29	28	27	26	25	24	23	22	21	20	19	18	17	16	15	14	13	12	11	10	9	8	7	6	5	4	3	2	1	0
Name	CONFIG_DATA																															
	Data ‘D’								Data ‘C’								Data ‘B’								Data ‘A’							
Operation	R/W								R/W								R/W								R/W							
Reset	n/a								n/a								n/a								n/a							

Perspective from the MPC bus in Big Endian mode:

Offset	$CFC								$CFD								$CFE								$CFF							
Bit (DL)	0	1	2	3	4	5	6	7	8	9	10	11	12	13	14	15	16	17	18	19	20	21	22	23	24	25	26	27	28	29	30	31
Name	CONFIG_DATA																															
	Data ‘A’								Data ‘B’								Data ‘C’								Data ‘D’							
Operation	R/W								R/W								R/W								R/W							
Reset	n/a								n/a								n/a								n/a							

Perspective from the MPC bus in Little Endian mode:

Offset	$CF8								$CF9								$CFA								$CFB							
Bit (DH)	0	1	2	3	4	5	6	7	8	9	10	11	12	13	14	15	16	17	18	19	20	21	22	23	24	25	26	27	28	29	30	31
Name	CONFIG_DATA																															
	Data ‘D’								Data ‘C’								Data ‘B’								Data ‘A’							
Operation	R/W								R/W								R/W								R/W							
Reset	n/a								n/a								n/a								n/a							

Raven Interrupt Controller Implementation

Introduction

This section describes the Raven Interrupt Controller in general.

The Raven Interrupt Controller (RavenMPIC) Features

- MPIC programming model
- Support for two processors
- Support for 16 external interrupts
- Support for 15 programmable Interrupt & Processor Task priority levels
- Support for the connection of an external 8259 for ISA/AT compatibility
- Distributed interrupt delivery for external I/O interrupts
- Direct/Multicast interrupt delivery for Interprocessor and timer interrupts
- Four Interprocessor Interrupt sources
- Four timers
- Processor initialization control

Architecture

The Raven PCI Slave implements two address decoders for placing the RavenMPIC registers in PCI IO or PCI Memory space. Access to these registers require MPC and PCI bus mastership. These accesses include interrupt and timer initialization and interrupt vector reads.

The RavenMPIC receives interrupt inputs from 16 external sources, four interprocessor sources, four timer sources, and one Raven internal error detection source. The externally sourced interrupts

1 through 15 have two modes of activation; low level or active high positive edge. External interrupt 0 can be either level or edge activated with either polarity. The Interprocessor and timers interrupts are event activated.

CSR's Readability

Unless explicitly specified, all registers are readable and return the last value written. The exceptions are the IPI dispatch registers and the EOI registers which return zeros on reads, the interrupt source ACT bit which returns current interrupt source status, the interrupt acknowledge register which returns the vector of the highest priority interrupt which is currently pending, and reserved bits which returns zeros. The interrupt acknowledge register is also the only register which exhibits any read side-effects.

Interrupt Source Priority

Each interrupt source is assigned a priority value in the range from 0 to 15 where 15 is the highest. In order for delivery of an interrupt to take place the priority of the source must be greater than that of the destination processor. Therefore setting a source priority to zero inhibits that interrupt.

Processor's Current Task Priority

Each processor has a task priority register which is set by system software to indicate the relative importance of the task running on that processor. The processor will not receive interrupts with a priority level equal to or lower than its current task priority. Therefore setting the current task priority to 15 prohibits the delivery of all interrupts to the associated processor.

Nesting of Interrupt Events

A processor is guaranteed never to have an in-service interrupt preempted by an equal or lower priority source. An interrupt is considered to be in service from the time its vector is returned

during an interrupt acknowledge cycle until an EOI is received for that interrupt. The EOI cycle indicates the end of processing for the highest priority in-service interrupt.

Spurious Vector Generation

Under certain circumstances the RavenMPIC will not have a valid vector to return to the processor during an interrupt acknowledge cycle. In these cases the spurious vector from the spurious vector register will be returned. The following cases would cause a spurious vector fetch.

- INT is asserted in response to an externally sourced interrupt which is activated with level sensitive logic and the asserted level is negated before the interrupt is acknowledged.
- INT is asserted for an interrupt source which is masked using the mask bit in the Vector-Priority register before the interrupt is acknowledged.

Interprocessor Interrupts (IPI)

Processor 0 and 1 can generate interrupts which are targeted for the other processor or both processors. There are four Interprocessor Interrupts (IPI) channels. The interrupts are initiated by writing a bit in the IPI dispatch registers. If subsequent IPIs are initiated before the first is acknowledged, only one IPI will be generated. The IPI channels deliver interrupts in the Direct Mode and can be directed to more than one processor.

8259 Compatibility

The RavenMPIC provides a mechanism to support PC-AT compatible chip sets using the 8259 interrupt controller architecture. After power-on reset, the RavenMPIC defaults to 8259 pass-through mode. In this mode, interrupts from external source number 0 (the interrupt signal from the 8259 is connected to this external interrupt source on the RavenMPIC) are passed directly to

processor 0. If the pass-through mode is disabled, the 8259 interrupts are delivered using the priority and distribution mechanisms of the RavenMPIC.

The RavenMPIC does not interact with the vector fetch from the 8259 interrupt controller.

Raven-Detected Errors

Raven-detected errors are grouped together and sent to the interrupt logic as a singular interrupt source. The interrupt delivery mode for this interrupt is distributed. The Raven Error Vector-Priority Register should be programed for high true level sensitive activation.

For system implementations where the RavenMPIC controller is not used, the Raven-Detected Error condition will be made available by a signal which is external to the Raven ASIC. Presumably this signal would be connected to an externally sourced interrupt input of a MPIC controller in a different device. Since the MPIC specification defines external I/O interrupts to operate in the distributed mode, the delivery mode of this error interrupt should be consistent.

Timers

There is a divide by eight pre-scaler which is synchronized to the Raven clock (MPC processor clock). The output of the prescaler enables the decrement of the four timers. The timers may be used for system timing or to generate periodic interrupts. Each timer has four registers which are used for configuration and control. They are:

- Current Count Register
- Base Count Register
- Vector-Priority Register
- Destination Register

Interrupt Delivery Modes

The direct and distributed interrupt delivery modes are supported. Note that the direct deliver mode has sub modes of multicast or non-multicast. The Interprocessor Interrupts (IPIs) and Timer interrupts operate in the direct delivery mode. The externally sourced or I/O interrupts operate in the distributed mode.

In the direct delivery mode, the interrupt is directed to one or both processors. If it is directed to two processors (i.e. multicast), it will be delivered to two processors. The interrupt is delivered to the processor when the priority of the interrupt is greater than the priority contained in the task register for that processor, and when the priority of the interrupt is greater than any interrupt which is in-service for that processor. An interrupt is considered to be in service from the time its vector is returned during an interrupt acknowledge cycle until an EOI is received for that interrupt. The EOI cycle indicates the end of processing for the highest priority in-service interrupt.

In the distributed delivery mode, the interrupt is pointed to one or more processors but it will be delivered to only one processor. Therefore, for externally sourced or I/O interrupts, multicast delivery is not supported.The interrupt is delivered to a processor when the priority of the interrupt is greater than the priority contained in the task register for that processor, and when the priority of the interrupt is greater than any interrupt which is in-service for that processor, and when the priority of that interrupt is the highest of all interrupts pending for that processor, and when that interrupt is not in-service for the other processor. If both destination bits are set for each processor, the interrupt will be delivered to the processor that has a lower task register priority.

Note Because a deadlock condition can occur when the task register priorities for each processor are the same and both processors are targeted for interrupt delivery, the interrupt will be delivered to processor 0.

Block Diagram Description

The description of the block diagram focuses on the theory of operation for the interrupt delivery logic. If the preceding section is a satisfactory description of the interrupt delivery modes and the reader is not interested the logic implementation, this section can be skipped.

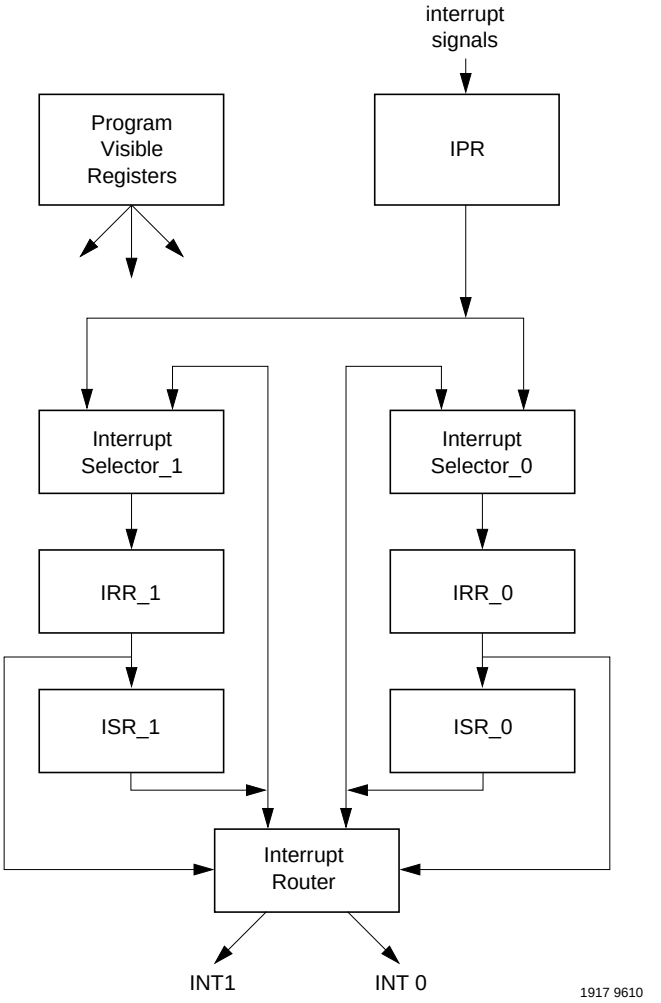

Figure 2-8. RavenMPIC Block Diagram

Program Visible Registers

These are the registers which software can access. They are described in detail in the Register section.

Interrupt Pending Register (IPR)

The interrupt signals to RavenMPIC are qualified and synchronized to the clock by the IPR. If the interrupt source is internal to the Raven ASIC or external with their Sense bit = 0 (edge sensitive), a bit is set in the IPR. That bit is cleared when the interrupt associated with that bit is acknowledge. If the interrupt source is external and level activated, the output from the IPR is not negated until the level into the IPR is negated.

Externally sourced interrupts are qualified based upon their Sense and/or Pol bits in the Vector-Priority register. IPI and Timer Interrupts are generated internally to the Raven ASIC and are qualified by their Destination bit. Since the internally generated interrupts use direct delivery mode with multicast capability, there are two bits in the IPR, one for each processor, associated with each IPI and Timer interrupt source.

The MASK bits from the Vector-Priority registers are used to qualify the output of the IPR. Therefore, if an interrupt condition is detected when the MASK bit is set, that interrupt will be requested when the MASK bit is lowered.

Interrupt Selector (IS)

There is a Interrupt Selector (IS) for each processor. The IS receives interrupt requests from the IPR. If the interrupt request are from an external source, they are qualified by the destination bit for that interrupt and processor. If they are from an internal source, they have been qualified. The output of the IS will be the highest priority interrupt that has been qualified. This output is the priority of the selected interrupt and its source identification. The IS will resolve an interrupt request in two Raven clock ticks.

The IS also receives a second set of inputs from the ISR. During the End Of Interrupt cycle, these inputs are used to select which bits are to be cleared in the ISR.

Interrupt Request Register (IRR)

There is a Interrupt Request Register (IRR) for each processor. The IRR always passes the output of the IS except during Interrupt Acknowledge cycles. This guarantees that the vector which is read from the Interrupt Acknowledge Register is not changing due to the arrival of a higher priority interrupt. The IRR also serves as a pipeline register for the two tick propagation time through the IS.

In-Service Register (ISR)

There is a In-Service Register (ISR) for each processor. The contents of the ISR is the priority and source of all interrupts which are in-service. The ISR receives a bit-set command during Interrupt Acknowledge cycles and a bit-clear command during End Of Interrupt cycles.

The ISR is implemented as a 40 bit register with individual bit set and clear functions. Fifteen bits are used to store the priority level of each interrupt which is in-service. Twenty-five bits are used to store the source identification of each interrupt which is in service. Therefore there is one bit for each possible interrupt priority and one bit for each possible interrupt source.

Interrupt Router

The Interrupt Router monitors the outputs from the ISRs, Current Task Priority Registers, Destination Registers, and the IRRs to determine when to assert a processor's INT pin.

When considering the following rule sets, it is important to remember that there are two types of inputs to the Interrupt Selectors. If the interrupt is a distributed class interrupt, there is a single bit in the IPR associated with this interrupt and it is delivered to both Interrupt Selectors. This IPR bit is qualified by the destination register contents for that interrupt before the Interrupt

Selector compares its priority to the priority of all other requesting interrupts for that processor. If the interrupt is programmed to be edge sensitive, the IPR bit is cleared when the vector for that interrupt is returned when the Interrupt Acknowledge register is examined. On the other hand, if the interrupt is a direct/multicast class interrupt, there are two bits in the IPR associated with this interrupt. One bit for each processor. Then one of these bits are delivered to each Interrupt Selector. Since this interrupt source can be multicast, each of these IPR bits must be cleared separately when the vector is returned for that interrupt to a particular processor.

If one of the following sets of conditions are true, the interrupt pin for processor 0 is driven active.

- Set1

  The source ID in IRR_0 is from an external source.

  The destination bit for processor 1 is a 0 for this interrupt.

  The priority from IRR_0 is greater than the highest priority in ISR_0.

  The priority from IRR_0 is greater than the contents of task register_0.

- Set2

  The source ID in IRR_0 is from an external source.

  The destination bit for processor 1 is a 1 for this interrupt.

  The source ID in IRR_0 is not present is ISR_1.

  The priority from IRR_0 is greater than the highest priority in ISR_0.

  The priority from IRR_0 is greater than the Task Register_0 contents.

  The contents of Task Register_0 is less than the contents of Task Register_1.

- Set3

  The source ID in IRR_0 is from an internal source.

The priority from IRR_0 is greater than the highest priority in ISR_0.

The priority from IRR_0 is greater than the Task Register_0 contents.

There is a possibility for a priority tie between the two processors when resolving external interrupts. In that case the interrupt is always delivered to processor 0. This case is not defined in the above rule set.

MPIC Registers

The following conventions are used in the Raven register charts:

- R Read Only field.
- R/W Read/Write field.
- S Writing a ONE to this field sets this field.
- C Writing a ONE to this field clears this field.

RavenMPIC Registers

The RavenMPIC register map is shown in the following table. The Off field is the address offset from the base address of the RavenMPIC registers in the MPC-IO or MPC-MEMORY space. Note that this map does not depict linear addressing. The Raven PCI-SLAVE has two decoders for generating the RavenMPIC select. These decoders will generate a select and acknowledge all accesses which are in a reserved 256K byte range. If the index into that 256K block does not decode a valid RavenMPIC register address, the logic will return $00000000.

The registers are 8, 16, or 32 bits accessible.

Table 2-9. RavenMPIC Register Map

31	30	29	28	27	26	25	24	23	22	21	20	19	18	17	16	15	14	13	12	11	10	9	8	7	6	5	4	3	2	1	0	Off
FEATURE REPORTING REGISTER 0																																**$01000**
GLOBAL CONFIGURATION REGISTER 0																																**$01020**
MPIC VENDOR IDENTIFICATION REGISTER																																**$01080**
PROCESSOR INIT REGISTER																																**$01090**
IPI0 VECTOR-PRIORITY REGISTER																																**$010a0**
IPI1 VECTOR-PRIORITY REGISTER																																**$010b0**
IPI2 VECTOR-PRIORITY REGISTER																																**$010c0**
IPI3 VECTOR-PRIORITY REGISTER																																**$010d0**
																								SP REGISTER								**$010e0**
TIMER FREQUENCY REPORTING REGISTER																																**$010f0**
TIMER 0 CURRENT COUNT REGISTER																																**$01100**
TIMER 0 BASE COUNT REGISTER																																**$01110**
TIMER 0 VECTOR-PRIORITY REGISTER																																**$01120**
TIMER 0 DESTINATION REGISTER																																**$01130**
TIMER 1 CURRENT COUNT REGISTER																																**$01140**
TIMER 1 BASE COUNT REGISTER																																**$01150**
TIMER 1VECTOR-PRIORITY REGISTER																																**$01160**
TIMER 1DESTINATION REGISTER																																**$01170**
TIMER 2 CURRENT COUNT REGISTER																																**$01180**
TIMER 2 BASE COUNT REGISTER																																**$01190**
TIMER 2 VECTOR-PRIORITY REGISTER																																**$011a0**
TIMER 2 DESTINATION REGISTER																																**$011b0**
TIMER 3 CURRENT COUNT REGISTER																																**$011c0**
TIMER 3 BASE COUNT REGISTER																																**$011d0**

31	30	29	28	27	26	25	24	23	22	21	20	19	18	17	16	15	14	13	12	11	10	9	8	7	6	5	4	3	2	1	0	Off
TIMER 3 VECTOR-PRIORITY REGISTER																																**$011e0**
TIMER 3 DESTINATION REGISTER																																**$011f0**
INT. SRC. 0 VECTOR-PRIORITY REGISTER																																**$10000**
INT. SRC. 0 DESTINATION REGISTER																																**$10010**
INT. SRC. 1 VECTOR-PRIORITY REGISTER																																**$10020**
INT. SRC. 1 DESTINATION REGISTER																																**$10030**
INT. SRC. 2 VECTOR-PRIORITY REGISTER																																**$10040**
INT. SRC. 2 DESTINATION REGISTER																																**$10050**
INT. SRC. 3 VECTOR-PRIORITY REGISTER																																**$10060**
INT. SRC. 3 DESTINATION REGISTER																																**$10070**
INT. SRC. 4 VECTOR-PRIORITY REGISTER																																**$10080**
INT. SRC. 4 DESTINATION REGISTER																																**$10090**
INT. SRC. 5 VECTOR-PRIORITY REGISTER																																**$100a0**
INT. SRC. 5 DESTINATION REGISTER																																**$100b0**
INT. SRC. 6 VECTOR-PRIORITY REGISTER																																**$100c0**
INT. SRC. 6 DESTINATION REGISTER																																**$100d0**
INT. SRC. 7 VECTOR-PRIORITY REGISTER																																**$100e0**
INT. SRC. 7 DESTINATION REGISTER																																**$100f0**
INT. SRC. 8 VECTOR-PRIORITY REGISTER																																**$10100**
INT. SRC. 8 DESTINATION REGISTER																																**$10110**
INT. SRC. 9 VECTOR-PRIORITY REGISTER																																**$10120**
INT. SRC. 9 DESTINATION REGISTER																																**$10130**
INT. SRC. 10 VECTOR-PRIORITY REGISTER																																**$10140**
INT. SRC. 10 DESTINATION REGISTER																																**$10150**
INT. SRC. 11 VECTOR-PRIORITY REGISTER																																**$10160**
INT. SRC. 11 DESTINATION REGISTER																																**$10170**
INT. SRC. 12 VECTOR-PRIORITY REGISTER																																**$10180**

31	30	29	28	27	26	25	24	23	22	21	20	19	18	17	16	15	14	13	12	11	10	9	8	7	6	5	4	3	2	1	0	Off
INT. SRC. 12 DESTINATION REGISTER																																**$10190**
INT. SRC. 13 VECTOR-PRIORITY REGISTER																																**$101a0**
INT. SRC. 13 DESTINATION REGISTER																																**$101b0**
INT. SRC. 14 VECTOR-PRIORITY REGISTER																																**$101c0**
INT. SRC. 14 DESTINATION REGISTER																																**$101d0**
INT. SRC. 15 VECTOR-PRIORITY REGISTER																																**$101e0**
INT. SRC. 15 DESTINATION REGISTER																																**$101f0**
RAVEN DETECTED ERRORS VECTOR-PRIORITY REGISTER																																**$10200**
RAVEN DETECTED ERRORS DESTINATION REGISTER																																**$10210**
IPI 0 DISPATCH REGISTER PROC. 0																																**$20040**
IPI 1 DISPATCH REGISTER PROC. 0																																**$20050**
IPI 2 DISPATCH REGISTER PROC. 0																																**$20060**
IPI 3 DISPATCH REGISTER PROC. 0																																**$20070**
CURRENT TASK PRIORITY REGISTER PROC. 0																																**$20080**
																								IACK REGISTER P0								**$200a0**
																								EOI REGISTER P0								**$200b0**
IPI 0 DISPATCH REGISTER PROC. 1																																**$21040**
IPI 1 DISPATCH REGISTER PROC. 1																																**$21050**
IPI 2 DISPATCH REGISTER PROC. 1																																**$21060**
IPI 3 DISPATCH REGISTER PROC. 1																																**$21070**
CURRENT TASK PRIORITY REGISTER PROC. 1																																**$21080**

31	30	29	28	27	26	25	24	23	22	21	20	19	18	17	16	15	14	13	12	11	10	9	8	7	6	5	4	3	2	1	0	Off
																								IACK REGISTER P1								**$210a0**
																								EOI REGISTER P1								**$210b0**

Feature Reporting Register

Offset	$01000																															
Bit	31	30	29	28	27	26	25	24	23	22	21	20	19	18	17	16	15	14	13	12	11	10	9	8	7	6	5	4	3	2	1	0
Name	FEATURE REPORTING																															
					NIRQ															NCPU					VID							
Operation	R				R												R			R					R							
Reset	$0				$00F												$0			$01					$02							

NIRQ **NUMBER OF IRQs.** The number of the highest external IRQ source supported. The IPI, Timer, and Raven Detected Error interrupts are excluded from this count.

NCPU **NUMBER OF CPUs**. The number of the highest physical CPU supported. There are two CPUs supported by this design. CPU #0 and CPU #1.

VID **VERSION ID**. Version ID for this interrupt controller. This value reports what level of the specification is supported by this implementation. Version level of 02 is used for the initial release of the MPIC specification.

Global Configuration Register

Offset	$01020																															
Bit	31	30	29	28	27	26	25	24	23	22	21	20	19	18	17	16	15	14	13	12	11	10	9	8	7	6	5	4	3	2	1	0
Name	GLOBAL CONFIGURATION																															
	RESET		M																													
Operation	C	R	R/W	R					R								R								R							
Reset	0	0	0	$00					$00								$00								$00							

R **RESET CONTROLLER.** Writing a one to this bit forces the controller logic to be reset. This bit is cleared automatically when the reset sequence is complete. While this bit is set, the values of all other register are undefined.

M **CASCADE MODE.** Allows cascading of an external 8259 pair connected to the first interrupt source input pin (0). This bit will always be set to a one, indicating mixed mode. In the mixed mode, 8259 interrupts are delivered using the priority and distribution mechanism of the RavenMPIC. The Vector/Priority and Destination registers for interrupt source 0 are used to control the delivery mode for all 8259 generated interrupt sources.

Vendor Identification Register

Offset	$01080			
Bit	31 30 29 28 27 26 25 24	23 22 21 20 19 18 17 16	15 14 13 12 11 10 9 8	7 6 5 4 3 2 1 0
Name	VENDOR IDENTIFICATION			
		STP		
Operation	R	R	R	R
Reset	$00	$02	$00	$00

There are two fields in the Vendor Identification Register which are not defined for the RavenMPIC implementation but are defined in the MPIC specification. They are the vendor identification and device ID fields.

STP **STEPPING.** The stepping or silicon revision number is initially 0.

Processor Init Register

Offset	$01090					
Bit	31 30 29 28 27 26 25 24	23 22 21 20 19 18 17 16	15 14 13 12 11 10 9 8	7 6 5 4 3 2	1	0
Name	PROCESSOR INIT					
					P1	P0
Operation	R	R	R	R	R/W	R/W
Reset	$00	$00	$00	$00	0	0

P1 **PROCESSOR 1.** Writing a 1 to P1 will assert the Soft Reset input of processor 1. Writing a 0 to it will negate the SRESET signal.

P0 **PROCESSOR 0.** Writing a 1 to P0 will assert the Soft Reset input of processor 0. Writing a 0 to it will negate the SRESET signal.

The Soft Reset input to the 604 is negative edge-sensitive.

IPI Vector/Priority Registers

Offset	IPI 0 - $010A0 IPI 1 - $010B0 IPI 2 - $010C0 IPI 3 - $010D0																															
Bit	31	30	29	28	27	26	25	24	23	22	21	20	19	18	17	16	15	14	13	12	11	10	9	8	7	6	5	4	3	2	1	0
Name	IPI VECTOR/PRIORITY																															
	MASK	ACT											PRIOR												VECTOR							
Operation	R/W	R	R										R/W				R								R/W							
Reset	1	0	$000										$0				$00								$00							

MASK **MASK.** Setting this bit disables any further interrupts from this source. If the mask bit is cleared while the bit associated with this interrupt is set in the IPR, the interrupt request will be generated.

ACT **ACTIVITY.** The activity bit indicates that an interrupt has been requested or that it is in-service. The ACT bit is set to a one when its associated bit in the Interrupt Pending Register or In-Service Register is set.

PRIOR Interrupt priority 0 is the lowest and 15 is the highest. Note that a priority level of 0 will not enable interrupts.

VECTOR This vector is returned when the Interrupt Acknowledge register is examined during a request for the interrupt associated with this vector.

Spurious Vector Register

Offset	$010E0																															
Bit	31	30	29	28	27	26	25	24	23	22	21	20	19	18	17	16	15	14	13	12	11	10	9	8	7	6	5	4	3	2	1	0
Name																									VECTOR							
Operation	R								R								R								R/W							
Reset	$00								$00								$00								$FF							

VECTOR This vector is returned when the Interrupt Acknowledge register is read during a spurious vector fetch.

Timer Frequency Register

Offset	$010F0																															
Bit	31	30	29	28	27	26	25	24	23	22	21	20	19	18	17	16	15	14	13	12	11	10	9	8	7	6	5	4	3	2	1	0
Name	TIMER FREQUENCY																															
Operation	R/W																															
Reset	$00000000																															

This register is used to report the frequency (in Hz) of the clock source for the global timers. Following reset, this register contains zero. For the Raven implementation of MPIC on the MVME2300 series, this register must be written with a value of $7de290 (which is 66/8 MHz or 8.25 MHz) which corresponds to a 66 MHz MPC bus.

Timer Current Count Registers

Offset	Timer 0 - $01100 Timer 1 - $01140 Timer 2 - $01180 Timer 3 - $011C0																															
Bit	31	30	29	28	27	26	25	24	23	22	21	20	19	18	17	16	15	14	13	12	11	10	9	8	7	6	5	4	3	2	1	0
Name	TIMER CURRENT COUNT																															
	T	CC																														
Operation	R	R																														
Reset	0	$00000000																														

T **TOGGLE.** This bit toggles when ever the current count decrements to zero.

CC **CURRENT COUNT.** The current count field decrements while the Count Inhibit bit is the Base Count Register is zero. When the timer counts down to zero, the Current Count register is reloaded from the Base Count register.

Timer Basecount Registers

Offset	Timer 0 - $01110 Timer 1 - $01150 Timer 2 - $01190 Timer 3 - $011D0																															
Bit	31	30	29	28	27	26	25	24	23	22	21	20	19	18	17	16	15	14	13	12	11	10	9	8	7	6	5	4	3	2	1	0
Name	TIMER BASECOUNT																															
	CI	BC																														
Operation	R/W	R/W																														
Reset	1	$00000000																														

CI **COUNT INHIBIT.** Setting this bit to one inhibits counting for this timer. Setting this bit to zero allows counting to proceed.

BC **BASE COUNT.** This field contains the 31 bit count for this timer. When a value is written into this register and the CI bit transitions from a 1 to a 0, it is copied into the corresponding Current Count register and the toggle bit in the Current Count register is cleared. When the timer counts down to zero, the Current Count register is reloaded from the Base Count register.

Timer Vector/Priority Registers

Offset	Timer 0 - $01120 Timer 1 - $01160 Timer 2 - $011A0 Timer 3 - $011E0																															
Bit	31	30	29	28	27	26	25	24	23	22	21	20	19	18	17	16	15	14	13	12	11	10	9	8	7	6	5	4	3	2	1	0
Name	TIMER VECTOR/PRIORITY																															
	MASK	ACT											PRIOR												VECTOR							
Operation	R/W	R	R										R/W				R								R/W							
Reset	1	0	$000										$0				$00								$00							

MASK **MASK.** Setting this bit disables any further interrupts from this source. If the mask bit is cleared while the bit associated with this interrupt is set in the IPR, the interrupt request will be generated.

ACT **ACTIVITY.** The activity bit indicates that an interrupt has been requested or that it is in-service. The ACT bit is set to a one when its associated bit in the Interrupt Pending Register or In-Service Register is set.

PRIOR Interrupt priority 0 is the lowest and 15 is the highest. Note that a priority level of 0 will not enable interrupts.

VECTOR This vector is returned when the Interrupt Acknowledge register is examined upon acknowledgment of the interrupt associated with this vector.

Timer Destination Registers

Offset	Timer 0 - $01130 Timer 1 - $01170 Timer 2 - $011B0 Timer 3 - $011F0																															
Bit	31	30	29	28	27	26	25	24	23	22	21	20	19	18	17	16	15	14	13	12	11	10	9	8	7	6	5	4	3	2	1	0
Name	TIMER DESTINATION																															
																															P1	P0
Operation	R								R								R								R						R/W	R/W
Reset	$00								$00								$00								$00						0	0

This register indicates the destinations for this timer's interrupts. Timer interrupts, operate in the Directed delivery interrupt mode. This register may specify multiple destinations (multicast delivery).

P1 **PROCESSOR 1**. The interrupt is directed to processor 1.

P0 **PROCESSOR 0.** The interrupt is directed to processor 0.

External Source Vector/Priority Registers

Offset	Int Src 0 - $10000 Int Src 2 -> Int Src15 - $10020 -> $101E0																															
Bit	31	30	29	28	27	26	25	24	23	22	21	20	19	18	17	16	15	14	13	12	11	10	9	8	7	6	5	4	3	2	1	0
Name	EXTERNAL SOURCE VECTOR/PRIORITY																															
	MASK	ACT							POL	SENSE			PRIOR												VECTOR							
Operation	R/W	R	R						R/W	R/W	R	R	R/W				R								R/W							
Reset	1	0	$000						0	0	0	0	$0				$00								$00							

MASK **MASK.** Setting this bit disables any further interrupts from this source. If the mask bit is cleared while the bit associated with this interrupt is set in the IPR, the interrupt request will be generated.

ACT **ACTIVITY.** The activity bit indicates that an interrupt has been requested or that it is in-service. The ACT bit is set to a one when its associated bit in the Interrupt Pending Register or In-Service Register is set.

POL **POLARITY.** This bit sets the polarity for external interrupts. Setting this bit to a zero enables active low or negative edge. Setting this bit to a one enables active high or positive edge. Only External Interrupt Source 0 uses this bit in this register.

SENSE **SENSE.** This bit sets the sense for external interrupts. Setting this bit to a zero enables edge sensitive interrupts. Setting this bit to a one enables level sensitive interrupts. For external interrupt sources 1 through 15, setting this bit to a zero enables positive edge triggered interrupts. Setting this bit to a one enables active low level triggered interrupts.

PRIOR Interrupt priority 0 is the lowest and 15 is the highest. Note that a priority level of 0 will not enable interrupts.

VECTOR This vector is returned when the Interrupt Acknowledge register is examined upon acknowledgment of the interrupt associated with this vector.

External Source Destination Registers

Offset	Int Src 0 - $10010 Int Src 2 -> Int Src 15 - $10030 -> $101F0																															
Bit	31	30	29	28	27	26	25	24	23	22	21	20	19	18	17	16	15	14	13	12	11	10	9	8	7	6	5	4	3	2	1	0
Name	EXTERNAL SOURCE DESTINATION																															
																															P1	P0
Operation	R								R								R								R						R/W	R/W
Reset	$00								$00								$00								$00						0	0

This register indicates the possible destinations for the external interrupt sources. These interrupts operate in the Distributed interrupt delivery mode.

P1 **PROCESSOR 1**. The interrupt is pointed to processor 1.

P0 **PROCESSOR 0.** The interrupt is pointed to processor 0.

Raven-Detected Errors Vector/Priority Register

Offset	$10200																															
Bit	31	30	29	28	27	26	25	24	23	22	21	20	19	18	17	16	15	14	13	12	11	10	9	8	7	6	5	4	3	2	1	0
Name	RAVEN DETECTED ERRORS VECTOR/PRIORITY																															
	MASK	ACT								SENSE			PRIOR								VECTOR											
Operation	R/W	R	R						R	R/W	R	R	R/W				R				R/W											
Reset	1	0	$000						0	0	0	0	$0				$00				$00											

MASK **MASK.** Setting this bit disables any further interrupts from this source. If the mask bit is cleared while the bit associated with this interrupt is set in the IPR, the interrupt request will be generated.

ACT **ACTIVITY.** The activity bit indicates that an interrupt has been requested or that it is in-service. The ACT bit is set to a one when its associated bit in the Interrupt Pending Register or In-Service Register is set.

SENSE **SENSE.** This bit sets the sense for external interrupts. Setting this bit to a zero enables positive edge sensitive interrupts. Setting this bit to a one enables active low level sensitive interrupts.

PRIOR Interrupt priority 0 is the lowest and 15 is the highest. Note that a priority level of 0 will not enable interrupts.

VECTOR This vector is returned when the Interrupt Acknowledge register is examined upon acknowledgment of the interrupt associated with this vector.

Raven-Detected Errors Destination Register

Offset	$10210																															
Bit	31	30	29	28	27	26	25	24	23	22	21	20	19	18	17	16	15	14	13	12	11	10	9	8	7	6	5	4	3	2	1	0
Name	RAVEN DETECTED ERROR DESTINATION																														P1	P0
Operation	R								R								R								R						R/W	R/W
Reset	$00								$00								$00								$00						0	0

This register indicates the possible destinations for the Raven detected error interrupt source. These interrupts operate in the Distributed interrupt delivery mode.

P1 **PROCESSOR 1**. The interrupt is pointed to processor 1.

P0 **PROCESSOR 0.** The interrupt is pointed to processor 0.

Interprocessor Interrupt Dispatch Registers

Offset	Processor 0 $20040, $20050, $20060, $20070 Processor 1 $21040, $21050,$21060, $21070																															
Bit	31	30	29	28	27	26	25	24	23	22	21	20	19	18	17	16	15	14	13	12	11	10	9	8	7	6	5	4	3	2	1	0
Name	IPI DISPATCH																														P1	P0
Operation	R								R								R								R						R/W	R/W
Reset	$00								$00								$00								$00						0	0

There are four Interprocessor Interrupt Dispatch Registers. Writing to an IPI Dispatch Register with the P0 and/or P1 bit set causes an interprocessor interrupt request to be sent to one or more

processors. Note that each IPI Dispatch Register has two addresses. These registers are considered to be per processor registers and there is one address per processor. Reading these registers returns zeros.

P1 **PROCESSOR 1**. The interrupt is directed to processor 1.

P0 **PROCESSOR 0.** The interrupt is directed to processor 0.

Interrupt Task Priority Registers

Offset	Processor 0 $20080 Processor 1 $21080																															
Bit	31	30	29	28	27	26	25	24	23	22	21	20	19	18	17	16	15	14	13	12	11	10	9	8	7	6	5	4	3	2	1	0
Name	INTERRUPT TASK PRIORITY																															
																															TP	
Operation	R								R								R								R						R/W	
Reset	$00								$00								$00								$0						$F	

There is one Task Priority Register per processor. Priority levels from 0 (lowest) to 15 (highest) are supported. Setting the Task Priority Register to 15 masks all interrupts to this processor. Hardware will set the task register to $F when it is reset or when the Init bit associated with this processor is written to a one.

Interrupt Acknowledge Registers

Offset	Processor 0 $200A0 Processor 1 $210A0																															
Bit	31	30	29	28	27	26	25	24	23	22	21	20	19	18	17	16	15	14	13	12	11	10	9	8	7	6	5	4	3	2	1	0
Name																									VECTOR							
Operation	R								R								R								R							
Reset	$00								$00								$00								$FF							

On PowerPC-based systems, Interrupt Acknowledge is implemented as a read request to a memory-mapped Interrupt Acknowledge register. Reading the Interrupt Acknowledge register returns the interrupt vector corresponding to the highest priority pending interrupt. Reading this register also has the following side effects.

- The associated bit in the Interrupt Pending Register is cleared.
- Reading this register will update the In-Service register.

Reading this register without a pending interrupt will return a value of $FF hex.

End-of-Interrupt Registers

Offset	Processor 0 $200B0 Processor 1 $210B0																															
Bit	31	30	29	28	27	26	25	24	23	22	21	20	19	18	17	16	15	14	13	12	11	10	9	8	7	6	5	4	3	2	1	0
Name																													EOI			
Operation	R								R								R								R				W			
Reset	$00								$00								$00								$0				$0			

EOI **END OF INTERRUPT.** There is one EOI register per processor. EOI Code values other than 0 are currently undefined. Data values written to this register are ignored; zero is assumed. Writing to this

register signals the end of processing for the highest priority interrupt currently in service by the associated processor. The write operation will update the In-Service register by retiring the highest priority interrupt. Reading this register returns zeros.

Programming Notes

External Interrupt Service

The following summarizes how an external interrupt is serviced:

1. An external interrupt occurs.
2. The processor state is saved in the machine status save/restore registers. A new value is loaded into the Machine State Register (MSR). The External Interrupt Enable bit in the new MSR (MSRee) is set to zero. Control is transferred to the O/S external interrupt handler.
3. The external interrupt handler calculates the address of the Interrupt Acknowledge register for this processor (RavenMPIC Base Address + 0x200A00 + (processor ID shifted left 12 bits)).
4. The external interrupt handler issues an Interrupt Acknowledge request to read the interrupt vector from the RavenMPIC. If the interrupt vector indicates the interrupt source is the 8259, the interrupt handler issues a second Interrupt Acknowledge request to read the interrupt vector from the 8259. The RavenMPIC does not interact with the vector fetch from the 8259.
5. The interrupt handler saves the processor state and other interrupt-specific information in system memory and re-enables for external interrupts (the MSRee bit is set to 1). RavenMPIC blocks interrupts from sources with equal or lower priority until an End-of-Interrupt is received for that interrupt source. Interrupts from higher priority interrupt

sources continue to be enabled. If the interrupt source was the 8259, the interrupt handler issues an EOI request to the RavenMPIC. This resets the In-Service bit for the 8259 within the RavenMPIC and allows it to recognize higher priority interrupt requests, if any, from the 8259. If none of the nested interrupt modes of the 8259 are enabled, the interrupt handler issues an EOI request to the 8259.

a. The device driver interrupt service routine associated with this interrupt vector is invoked.

b. If the interrupt source was not the 8259, the interrupt handler issues an EOI request for this interrupt vector to the RavenMPIC. If the interrupt source was the 8259 and any of the nested interrupt modes of the 8259 are enabled, the interrupt handler issues an EOI request to the 8259.

Normally, interrupts from ISA devices are connected to the 8259 interrupt controller. ISA devices typically rely on the 8259 Interrupt Acknowledge to flush buffers between the ISA device and system memory. If interrupts from ISA devices are directly connected to the RavenMPIC (bypassing the 8259), the device driver interrupt service routine must read status from the ISA device to ensure buffers between the device and system memory are flushed.

Reset State

After a power-on reset the RavenMPIC state is:

- Current task priority for all CPUs set to 15.
- All interrupt source priorities set to zero.
- All interrupt source mask bits set to a one.
- All interrupt source activity bits cleared.
- Processor Init Register is cleared.
- All counters stopped and interrupts disabled.
- Controller mode set to 8259 pass-through.

Operation

Interprocessor Interrupts

Four interprocessor interrupt (IPI) channels are provided for use by all processors. During system initialization the IPI vector/priority registers for each channel should be programmed to set the priority and vector returned for each IPI event. During system operation a processor may generate an IPI by writing a destination mask to one of the IPI dispatch registers.

Note that each IPI dispatch register is shared by both processors. Each IPI dispatch register has two addresses but they are shared by both processors. That is, there is a total of four IPI dispatch registers in the RavenMPIC.

The IPI mechanism may be used for self interrupts by programming the dispatch register with the bit mask for the originating processor.

Dynamically Changing I/O Interrupt Configuration

The interrupt controller provides a mechanism for safely changing the vector, priority, or destination of I/O interrupt sources. This is provided to support systems which allow dynamic configuration of I/O devices. In order to change the vector, priority, or destination of an active interrupt source, the following sequence should be performed:

1. Mask the source using the MASK bit in the vector/priority register.
2. Wait for the activity bit (ACT) for that source to be cleared.
3. Make the desired changes.
4. Unmask the source.

This sequence ensures that the vector, priority, destination, and mask information remain valid until all processing of pending interrupts is complete.

EOI Register

Each processor has a private EOI register which is used to signal the end of processing for a particular interrupt event. If multiple nested interrupts are in service, the EOI command terminates the interrupt service of the highest priority source. Once an interrupt is acknowledged, only sources of higher priority will be allowed to interrupt the processor until the EOI command is received. This register should always be written with a value of zero which is the nonspecific EOI command.

Interrupt Acknowledge Register

Upon receipt of an interrupt signal, the processor may read this register to retrieve the vector of the interrupt source which caused the interrupt.

8259 Mode

The 8259 mode bits control the use of an external 8259 pair for PC-AT compatibility. Following a reset, this mode is set for pass-through, which essentially disables the advanced controller and passes an 8259 input on external interrupt source 0 directly through to processor zero. During interrupt controller initialization this channel should be programmed for mixed mode in order to take advantage of the interrupt delivery modes.

Current Task Priority Level

Each processor has a separate Current Task Priority Level register. The system software uses this register to indicate the relative priority of the task running on the corresponding processor. The interrupt controller will not deliver an interrupt to a processor unless it has a priority level which is greater than the current task priority level of that processor. This value is also used in determining the destination for interrupts which are delivered using the distributed deliver mode.

Architectural Notes

The hardware and software overhead required to update the task priority register synchronously with instruction execution may far outweigh the anticipated benefits of the task priority register. To minimize this overhead, the interrupt controller architecture should allow the task priority register to be updated asynchronously with respect to instruction execution. Lower priority interrupts may continue to occur for an indeterminate number of cycles after the processor has updated the task priority register. If this is not acceptable, the interrupt controller architecture should recommend that, if the task priority register is not implemented with the processor, the task priority register should be updated only when the processor enter or exits an idle state.

Only when the task priority register is integrated within the processor, (such that it can be accessed as quickly as the MSRee bit defined in the *Programming Notes* section, for example), should the architecture require the task priority register to be updated synchronously with instruction execution.

Falcon ECC Memory Controller Chip Set

3

Introduction

The Falcon DRAM controller ASIC is designed for the MVME2300 family of boards. It is used in sets of two to provide the interface between the PowerPC 60*x* bus (also called MPC60*x* bus or MPC bus) and a 144-bit ECC-DRAM memory system. It also provides an interface to ROM/Flash.

Overview

This chapter provides a functional description and programming model for the Falcon. Most of the information for using the device in a system, programming it in a system, and testing it is contained here.

Bit Ordering Convention

All Falcon bused signals are named using big-endian bit ordering (bit 0 is the most significant bit).

Features

- DRAM Interface
  - Double-bit error detect/Single-bit error correct on 72-bit basis.
  - Up to four blocks.
  - Programmable base address for each block.
  - Two-way interleave factor.
  - Built-in Refresh/Scrub.
- Error Notification for DRAM

  - Software programmable Interrupt on Single/Double-Bit Error.
  - Error address and Syndrome Log Registers for Error Logging.
  - Does not provide TEA_ on Double-Bit Error. (Chip has no TEA_ pin.)

- ROM/Flash Interface
  - Two blocks with two 8-bit devices, or two 32-bit devices per block.

Block Diagrams

Figure 3-1 depicts a Falcon pair as it would be connected in a system. Figure 3-2 shows the Falcon's internal data paths. Figure 3-3 shows the overall DRAM connections.

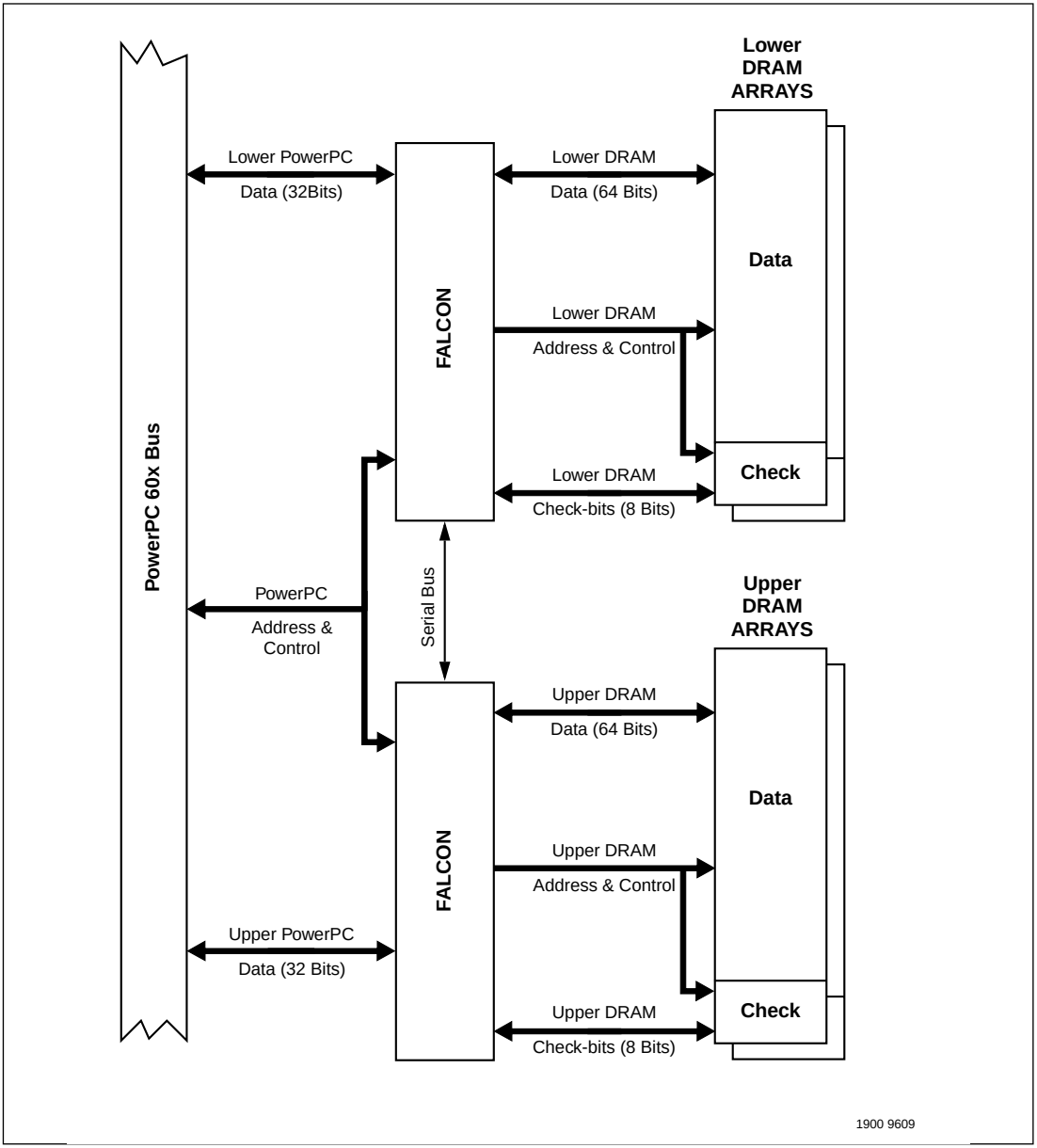

Figure 3-1. Falcon Pair Used with DRAM in a System

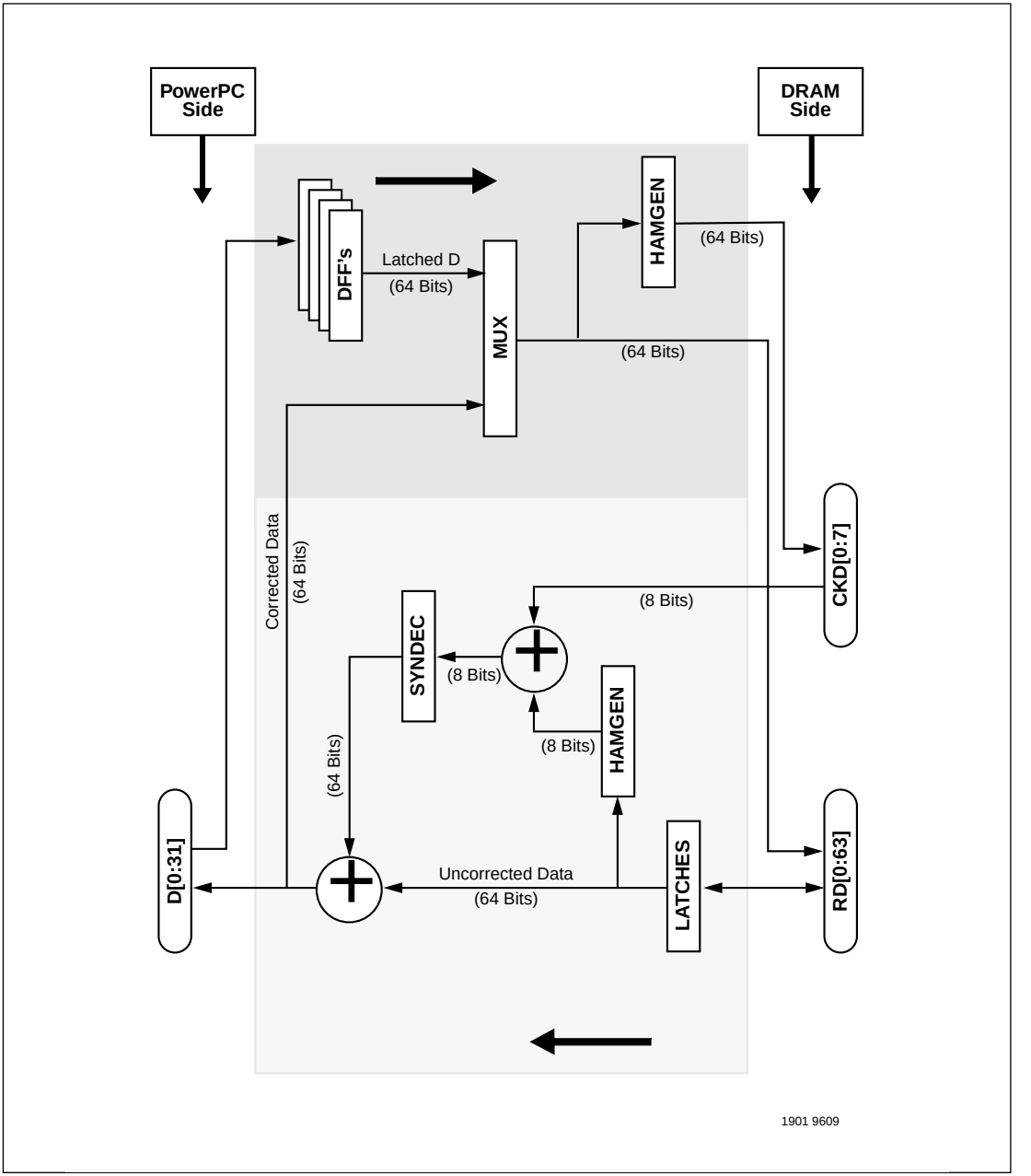

Figure 3-2. Falcon Internal Data Paths (Simplified)

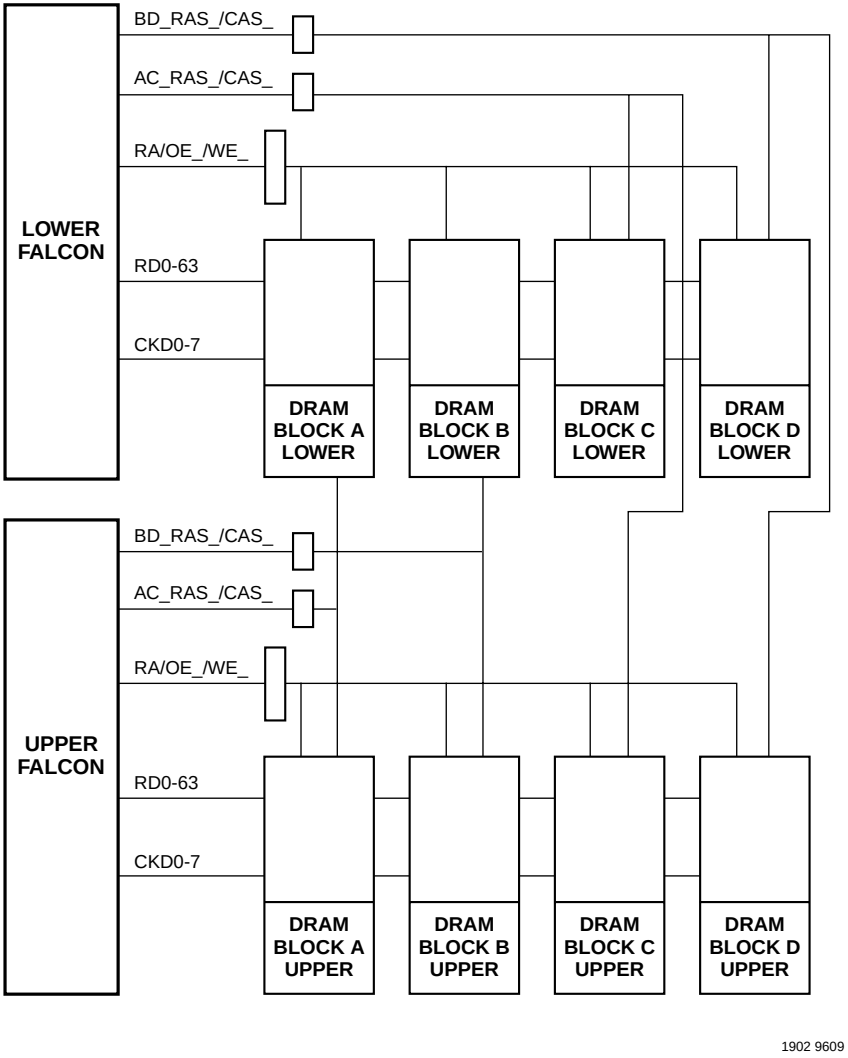

Figure 3-3. Overall DRAM Connections

Functional Description

The following sections describe the logical function of the ASIC. The Falcon is designed to be used as a set of two chips. A pair of Falcons works with *x1* or wider DRAM memory devices to form a memory system for the PowerPC 60*x* bus. A pair of Falcons that is connected to implement a memory control function is referred to in this document as a "Falcon pair".

Performance

Four-beat Reads/Writes

The Falcon pair is specifically designed to provide maximum performance for cache line (four-beat) cycles to and from the PowerPC 60x bus at 66MHz. This is done by providing a two-way interleave between the 64-bit PowerPC 60x data bus and the 128-bit (144 with check-bits) DRAM bus. When a PowerPC 60x bus master begins a quad-aligned, four-beat read to DRAM, the Falcon pair accesses the full 144-bit width of DRAM at once so that when the DRAM access time is reached, not only is the first 64-bit double-word of data ready to be transferred to the PowerPC 60x bus master, but so is the next. While the Falcon pair is presenting the first two double-words to the PowerPC 60x bus, it cycles CAS without cycling RAS to obtain the next two double-words. The Falcon pair transfers the next two double-words to the PowerPC 60x bus after 0 or more idle clocks.

The Falcon pair also takes advantage of the fact that PowerPC 60x processors can do address pipelining. Many times while a data cycle is finishing, the PowerPC 60x processor begins a new address cycle. The Falcon pair can begin the next DRAM access earlier when this happens, thus shortening the access time. Further savings come when the new address cycle is to an address close enough to the previous one that it falls within the same row in the DRAM array. When this happens, the Falcon pair can transfer the data for the next cycle by cycling CAS without cycling RAS.

Single-beat Reads/Writes

Single-beat cycles to and from the PowerPC 60x bus do not achieve data rates as high as do four-beat cycles. The Falcon pair does take advantage of the PowerPC 60x address pipelining as much as possible for single-beat accesses.

Single-beat writes are the slowest kind of accesses because they require that the Falcon pair perform a read cycle then a write cycle to the DRAM in order to complete. When the Falcon pair can take advantage of address pipelining, back-to-back single-beat writes take 10 clocks to complete.

DRAM Speeds

The Falcon pair can be configured for 3 different speeds of DRAM: 50ns, 60ns and 70ns. When the Falcon pair is configured for 50ns DRAMs, it assumes that the devices are Hyper-Page parts. When the Falcon pair is configured for 70ns DRAMs it assumes that the devices are Page parts. When the pair is configured for 60ns DRAMs, it allows the devices to be either Page or Hyper-Page parts. Performance summaries using the different devices are shown in Tables 3-1, 3-2, and 3-3.

Table 3-1. PowerPC 60x Bus to DRAM Access Timing When Configured for 70ns Page Devices

ACCESS TYPE	CLOCK PERIODS REQUIRED FOR:				Total Clocks
	1st Beat	2nd Beat	3rd Beat	4th Beat	
4-Beat Read after Idle (Quad-word aligned)	10	1	3	1	15
4-Beat Read after Idle (Quad-word misaligned)	10	4	1	1	16
4-Beat Read after 4-Beat Read (Quad-word aligned)	9/3 [1]	1	3	1	14/8
4-Beat Read after 4-Beat Read (misaligned)	7/2 [1]	4	1	1	13/8
4-Beat Write after Idle	4	1	1	1	7
4-Beat Write after 4-Beat Write (Quad-word aligned)	10/6 [1]	1	1	1	13/9
1-Beat Read after Idle	10	-	-	-	10
1-Beat Read after 1-Beat Read	11/7 [1]	-	-	-	11/7
1-Beat Write after Idle	4	-	-	-	4
1-Beat Write after 1-Beat Write	15/11 [1]	-	-	-	15/11

Notes:

1. These numbers assume that the PowerPC 60x bus master is doing address pipelining with TS_ occurring at the minimum time after AACK_ is asserted. Also the two numbers shown in the 1st beat column are for page miss/page hit.
2. In some cases, the numbers shown are averages and specific instances may be longer or shorter.

Table 3-2. PowerPC 60x Bus to DRAM Access Timing When Configured for 60ns Page Devices.

ACCESS TYPE	CLOCK PERIODS REQUIRED FOR:				Total Clocks
	1st Beat	2nd Beat	3rd Beat	4th Beat	
4-Beat Read after Idle (Quad-word aligned)	9	1	2	1	13
4-Beat Read after Idle (Quad-word misaligned)	9	3	1	1	14
4-Beat Read after 4-Beat Read (Quad-word aligned)	7/3 [1]	1	2	1	11/7
4-Beat Read after 4-Beat Read (misaligned)	6/2 [1]	3	1	1	11/7
4-Beat Write after Idle	4	1	1	1	7
4-Beat Write after 4-Beat Write (Quad-word aligned)	7/3 [1]	1	1	1	10/6
1-Beat Read after Idle	9	-	-	-	9
1-Beat Read after 1-Beat Read	9/6 [1]	-	-	-	9/6
1-Beat Write after Idle	4	-	-	-	4
1-Beat Write after 1-Beat Write	13/10 [1]	-	-	-	13/10

Notes:

1. These numbers assume that the PowerPC 60x bus master is doing address pipelining with TS_ occurring at the minimum time after AACK_ is asserted. Also the two numbers shown in the 1st beat column are for page miss/page hit.
2. In some cases, the numbers shown are averages and specific instances may be longer or shorter.

Table 3-3. PowerPC 60x Bus to DRAM Access Timing When Configured for 50ns Hyper Devices

ACCESS TYPE	CLOCK PERIODS REQUIRED FOR:				Total Clocks
	1st Beat	2nd Beat	3rd Beat	4th Beat	
4-Beat Read after Idle (Quad-word aligned)	8	1	1	1	11
4-Beat Read after Idle (Quad-word misaligned)	8	2	1	1	12
4-Beat Read after 4-Beat Read (Quad-word aligned)	5/2 [1]	1	1	1	8/5
4-Beat Read after 4-Beat Read (misaligned)	4/2 [1]	2	1	1	8/6
4-Beat Write after Idle	4	1	1	1	7
4-Beat Write after 4-Beat Write (Quad-word aligned)	4/3 [1]	1	1	1	7/6
1-Beat Read after Idle	8	-	-	-	8
1-Beat Read after 1-Beat Read	7/5 [1]	-	-	-	7/5
1-Beat Write after Idle	4	-	-	-	4
1-Beat Write after 1-Beat Write	9/7 [1]	-	-	-	9/7

Notes:

1. These numbers assume that the PowerPC 60x bus master is doing address pipelining with TS_ occurring at the minimum time after AACK_ is asserted. Also the two numbers shown in 1st beat column are for page miss/page hit.
2. In some cases, the numbers shown are averages and specific instances may be longer or shorter.

ROM/Flash Speeds

The Falcon pair provides the interface for two blocks of ROM/Flash. Each block can address up to 64Mbytes of memory depending on the width implemented for that block (16 bits or 64 bits). Bank A is 64-bit wide and bank B is 16-bit wide. The access times for ROM/Flash are shown in Tables 3-4 and 3-5.

Table 3-4. PowerPC 60x Bus to ROM/Flash Access Timing When Configured for 64 Bits (32 Bits per Falcon)

ACCESS TYPE	CLOCK PERIODS REQUIRED FOR:				Total Clocks
	1st Beat	2nd Beat	3rd Beat	4th Beat	
4-Beat Read	20	16	16	16	68
4-Beat Write	N/A	N/A	N/A	N/A	N/A
1-Beat Read	20	-	-	-	20
1-Beat Write	19	-	-	-	19

Table 3-5. PowerPC 60x Bus to ROM/Flash Access Timing When Configured for 16 Bits (8 Bits per Falcon)

ACCESS TYPE	CLOCK PERIODS REQUIRED FOR:				Total Clocks
	1st Beat	2nd Beat	3rd Beat	4th Beat	
4-Beat Read	68	64	64	64	260
4-Beat Write	N/A	N/A	N/A	N/A	N/A
1-Beat Read (2 bytes to 8 bytes)	68	-	-	-	68
1-Beat Read (1 byte)	20	-	-	-	20
1-Beat Write	19	-	-	-	19

PowerPC 60x Bus Interface

The Falcon pair has a PowerPC slave interface only. It has no PowerPC master interface. The slave interface is the mechanism for all accesses to DRAM, ROM/Flash, and Falcon registers/SRAM.

Responding to Address Transfers

When the Falcon pair detects an address transfer that it is to respond to, it asserts AACK_ immediately if there is no uncompleted PowerPC 60x bus data transfer in process. If there is one in process, then the Falcon pair waits and asserts AACK_ coincident with the uncompleted data transfer's last data beat if the Falcon pair is the slave for the previous data. If it is not, it holds off AACK_ until the CLOCK after the previous data transfer's last data beat.

Completing Data Transfers

If an address transfer to the Falcon pair will have an associated data transfer, the Falcon pair begins a read or write cycle to the accessed entity (DRAM/ROM/Flash/Internal Register) as soon as the entity is free. If the data transfer will be a read, the Falcon pair begins providing data to the PowerPC 60x bus as soon as the entity has data ready and the PowerPC 60x data bus is granted. If the data transfer will be a write, the Falcon pair begins latching data from the PowerPC data bus as soon as any previously latched data is no longer needed and the PowerPC 60x data bus has been granted.

Cache Coherency

The Falcon pair supports cache coherency by monitoring the ARTRY_ control signal on the PowerPC 60x bus and behaving appropriately when it is asserted. When ARTRY_ is asserted, if the access is a read, the Falcon pair does not source the data for that access. If the access is a write, the Falcon does not write the data for that access to the DRAM array. Depending upon when the retry occurs however, the Falcon pair may cycle the DRAM even though the data transfer does not happen.

Cache Coherency Restrictions

The PowerPC 60x GBL_ signal must not be asserted in the CSR areas.

L2 Cache Support

The Falcon pair provides support for a look-aside L2 cache by implementing a hold-off input, L2CLM_. On cycles that select the Falcon pair, the Falcon pair samples L2CLM_ on the second rising edge of CLOCK after the assertion of TS_. If L2CLM_ is high, the Falcon pair responds normally to the cycle. If it is low, the Falcon pair ignores the cycle.

Note The MVME2300 series boards have no L2 cache.

ECC

The Falcon pair performs single-bit error correction and double-bit error detection for DRAM. (No checking is provided for ROM /Flash.) The 64-bit wide PowerPC 60x data bus is divided into upper (DH0-DH31) and lower (DL0-DL31) halves. Each half is routed through a Falcon which multiplexes it with half of the DRAM data bus. Each Falcon connects to 64 DRAM data-bits and to 8 DRAM check-bits. The total DRAM array width is 144 bits (2*[64+8]).

Cycle Types

To support ECC, the Falcon pair always deals with DRAM using full width (144-bit) accesses. When the PowerPC 60x bus master requests any size read of DRAM, the Falcon pair reads 144 bits at least once. When the PowerPC 60x bus master requests a four-beat write to DRAM, the Falcon pair writes all 144 bits twice. When the PowerPC 60x bus master requests a single-beat write to DRAM, the Falcon pair performs a 144-bit wide read cycle to DRAM, merges in the appropriate PowerPC 60x bus write data, and writes 144 bits back to DRAM.

Error Reporting

The Falcon pair checks data from the DRAM during single- and four-beat reads, during single-beat writes, and during scrubs. Table 3-6 shows the actions it takes for different errors during these accesses.

Note that the Falcon pair does not assert TEA_ on double-bit errors. In fact, the Falcon pair does not have a TEA_ signal pin and it assumes that the system does not implement TEA_. The Falcon can, however, assert machine check (MCP_) on double-bit error.

Table 3-6. Error Reporting

Error Type	Single-Beat/Four-Beat Read	Single-Beat Write	Four-Beat Write	Scrub
Single-Bit Error	Terminate the PowerPC 60x bus cycle normally. Provide corrected data to the PowerPC 60x bus master. Assert INT_ if so enabled.	Terminate the PowerPC 60x bus cycle normally. Correct the data read from DRAM, merge with the write data, and write the corrected, merged data to DRAM. Assert INT_ if so enabled.	N/A [1]	This cycle is not seen on the PowerPC 60x bus. Write corrected data back to DRAM if so enabled. Assert INT_ if so enabled.
Double-Bit Error	Terminate the PowerPC 60x bus cycle normally. Provide miss-corrected, raw DRAM data to the PowerPC 60x bus master. Assert INT_ if so enabled. Assert MCP_ if so enabled.	Terminate the PowerPC 60x bus cycle normally. Do not perform the write portion of the read-modify-write cycle to DRAM. Assert INT_ if so enabled. Assert MCP_ if so enabled.	N/A [1]	This cycle is not seen on the PowerPC 60x bus. Do not perform the write portion of the read-modify-write cycle to DRAM. Assert INT_ if so enabled.
Triple- (or greater) Bit Error	Some of these errors are detected correctly and are treated the same as double-bit errors. The rest could show up as “no error” or “single-bit error”, both of which are incorrect.			

Notes:

1. No opportunity for error since no read of DRAM occurs during a four-beat write.

Error Logging

ECC error logging is facilitated by the Falcon because of its internal latches. When an error (single- or double-bit) occurs in the DRAMs to which a Falcon is connected, it records the address and syndrome bits associated with the data in error. Each Falcon performs this logging function independently of the other. Once a Falcon has logged an error, it does not log any more until the ***elog*** control /status bit has been cleared by software unless the currently logged error is single-bit and a new, double-bit error is encountered. The logging of errors that occur during scrub can be enabled/disabled in software. Refer to the *Error Logger Register* in this chapter.

DRAM Tester

Caution

The DRAM tester is for in-house manufacturing testing purposes only and should not be used by customers.

ROM/Flash Interface

The Falcon pair provides the interface for two blocks of ROM/Flash. Each block provides addressing and control for up to 64Mbytes. Note that no error checking (ECC or Parity) is provided for the ROM/Flash.

The ROM/Flash interface allows each block to be individually configured by jumpers and/or by software as follows:

1. Access for each block is controlled by two software programmable control register bits: an overall enable, a write enable, and a reset vector enable. The overall enable controls normal read accesses. The write enable is used to program Flash devices. The reset vector enable controls whether the block is also enabled at $FFF00000 - $FFFFFFFF. The overall enable and write enable bits are always cleared at reset. The reset vector enable bit is cleared or set at reset depending on external jumper configuration. This allows the board designer to use external jumpers to enable/disable Block A/B ROM/Flash as the source of reset vectors.

   The write enable bit is cleared at reset for both blocks.

2. The base address for each block is software programmable. At reset, Block A's base address is $FF000000 and Block B's base address is $FF400000.

   As noted above, in addition to appearing at the programmed base address, the first 1Mbyte of Block A/B also appears at $FFF00000-$FFFFFFFF if the reset vector enable bit is set.

3. The assumed size for each block is software programmable. It is initialized to its smallest setting at reset.

4. The assumed device type for Block A/B is determined by an external jumper at reset time. It also is available as a status bit and cannot be changed by software.

   When the width status bit is cleared, the block's ROM /Flash is considered to be t16 bits wide, where each Falcon interfaces to 8 bits. In this mode, the following rules are enforced:

a. only single-byte writes are allowed (all other sizes are ignored), and

b. all reads are allowed (multiple accesses are performed to the ROM/Flash devices when the read is for greater than one byte).

When the width status bit is set, the block's ROM/Flash is considered to be 64 bits wide, where each Falcon interfaces with 32 bits. In this mode, the following rules are enforced:

a. only aligned, 4-byte writes should be attempted (all other sizes are ignored), and

b. all reads are allowed (multiple accesses to the ROM/Flash device are performed for burst reads).

More information about ROM/Flash is found in the section on the *Programming Model* in this chapter.

In order to place code correctly in the ROM/Flash devices, address mapping information is required. Table 3-7 shows how PowerPC 60x addresses map to the ROM/Flash addresses when ROM/Flash is 16 bits wide (8 bits per Falcon). Table 3-8 shows how they map when Flash is 64 bits wide (32 bits per Falcon).

Table 3-7. PowerPC 60x to ROM/Flash Address Mapping when ROM/Flash is 16 Bits Wide (8 Bits per Falcon)

PowerPC 60x A0-A31	ROM/Flash A22-A0	ROM/Flash Device Selected
$XX000000	$000000	Upper
$XX000001	$000001	Upper
$XX000002	$000002	Upper
$XX000003	$000003	Upper
$XX000004	$000000	Lower
$XX000005	$000001	Lower
$XX000006	$000002	Lower
$XX000007	$000003	Lower
$XX000008	$000004	Upper
$XX000009	$000005	Upper
$XX00000A	$000006	Upper
$XX00000B	$000007	Upper
$XX00000C	$000004	Lower
$XX00000D	$000005	Lower
$XX00000E	$000006	Lower
$XX00000F	$000007	Lower
. . .	. . .	. . .
$XXFFFFF8	$7FFFFC	Upper
$XXFFFFF9	$7FFFFD	Upper
$XXFFFFFA	$7FFFFE	Upper
$XXFFFFFB	$7FFFFF	Upper
$XXFFFFFC	$7FFFFC	Lower
$XXFFFFFD	$7FFFFD	Lower
$XXFFFFFE	$7FFFFE	Lower
$XXFFFFFF	$7FFFFF	Lower

Table 3-8. PowerPC 60x to ROM/Flash Address Mapping when ROM/Flash is 64 Bits Wide (32 Bits per Falcon)

PowerPC 60x A0-A31	ROM/Flash A22-A0	ROM/Flash Device Selected
$X0000000	$000000	Upper
$X0000001	$000000	Upper
$X0000002	$000000	Upper
$X0000003	$000000	Upper
$X0000004	$000000	Lower
$X0000005	$000000	Lower
$X0000006	$000000	Lower
$X0000007	$000000	Lower
$X0000008	$000001	Upper
$X0000009	$000001	Upper
$X000000A	$000001	Upper
$X000000B	$000001	Upper
$X000000C	$000001	Lower
$X000000D	$000001	Lower
$X000000E	$000001	Lower
$X000000F	$000001	Lower
. . .	. . .	. . .
$X3FFFFF0	$7FFFFE	Upper
$X3FFFFF1	$7FFFFE	Upper
$X3FFFFF2	$7FFFFE	Upper
$X3FFFFF3	$7FFFFE	Upper
$X3FFFFF4	$7FFFFE	Lower
$X3FFFFF5	$7FFFFE	Lower
$X3FFFFF6	$7FFFFE	Lower
$X3FFFFF7	$7FFFFE	Lower
$X3FFFFF8	$7FFFFF	Upper

Table 3-8. PowerPC 60x to ROM/Flash Address Mapping when ROM/Flash is 64 Bits Wide (32 Bits per Falcon) (Continued)

PowerPC 60x A0-A31	ROM/Flash A22-A0	ROM/Flash Device Selected
$X3FFFFF9	$7FFFFF	Upper
$X3FFFFFA	$7FFFFF	Upper
$X3FFFFFB	$7FFFFF	Upper
$X3FFFFFC	$7FFFFF	Lower
$X3FFFFFD	$7FFFFF	Lower
$X3FFFFFE	$7FFFFF	Lower
$X3FFFFFF	$7FFFFF	Lower

Refresh/Scrub

Refresh/Scrub is done differently based on which DRAM blocks are populated: (A and/or B) but not (C and D), or (A and/or B) and (C and/or D).

Blocks A and/or B Present, Blocks C and D Not Present

The Falcon pair performs refresh by doing a burst of four RAS_ cycles approximately once every 60µs. This increases to once every 30µs when certain DRAM devices are used. (Controlled by the ram_fref bit in the status registers.) RAS_ is asserted to both of Blocks A and B during each of the 4 cycles. Along with RAS_, the Falcon pair also asserts CAS_ with (OE_ then WE_) to one of the blocks during one of the four cycles. This forms a read-modify-write which is a scrub cycle to that location.

After each of the 4 cycles, the DRAM row address increments by one. When it reaches all 1's, it rolls over and starts over at 0. Each time the row address rolls over, the block that is scrubbed toggles between A and B. Every second time that the row address rolls over, which of the 4 cycles that is a scrub changes from 1st to 2nd, from 2nd to 3rd, from 3rd to 4th, or from 4th to 1st. Every eighth time that the row address rolls over, the column address increments by one. When the column address reaches all 1's, it rolls over and starts over at 0. Each time the column address rolls over, the SC1, SC0 bits in the scrub/refresh register increment by one.

Blocks A and/or B Present, Blocks C and/or D present

The Falcon pair performs refresh by doing a burst of four RAS_ cycles approximately once every 30µs. This increases to once every 15µs when certain DRAM devices are used. (Controlled by the ram_fref bit in the status registers.) RAS_ is asserted to blocks A and B during the first cycle, to blocks C and D during the second cycle, back to blocks A and B during the third cycle and to blocks C and D during the fourth cycle. Along with RAS, the Falcon pair also asserts CAS_ with (OE_ then WE_) to one of the blocks during one of the four cycles. This forms a read-modify-write which is a scrub cycle to that location.

After the second and fourth cycles, the DRAM row address increments by one. When it reaches all 1's, it rolls over and starts over at 0. Each time the row address rolls over, the block that is scrubbed toggles between A/C and B/D. Every second time the row address rolls over, which of the 4 cycles that is a scrub changes from 1st to 2nd, from 2nd to 3rd, from 3rd to 4th, or from 4th to 1st. Every eighth time that the row address rolls over, the column address increments by one. When the column address reaches all 1's, it rolls over and starts over at 0. Each time the column address rolls over, the SC1, SC0 bits in the scrub/refresh register increment by one.

Note that an entire refresh of DRAM is achieved every time the row address rolls over, and that an entire scrub of DRAM is achieved every time the column address rolls over.

During scrub cycles, if the SWEN bit is cleared, the Falcon pair *does not* perform the write portion of the read-modify write cycle. If the SWEN bit is set, the Falcon pair *does* perform the write unless it encounters a double-bit error during the read.

If so enabled, single- and double-bit scrub errors are logged, and the PowerPC 60x bus master is notified via interrupt.

DRAM Arbitration

The Falcon pair has 3 different entities that can request use of the DRAM cycle controller:

- The PowerPC 60x bus master
- The tester
- The refresher/scrubber

The Falcon pair's arbiters assign priority with the refresher/scrubber highest, the tester next, and the PowerPC 60x bus lowest. When no requests are pending, the arbiter defaults to providing a PowerPC 60x bus grant. This provides fast response for PowerPC 60x bus cycles. Although the arbiter operates on a priority basis, it also performs a pseudo round-robin algorithm in order to prevent starving any of the requesting entities. Note that PowerPC DRAM or ROM/Flash accesses should not be attempted while the tester is in operation.

Chip Defaults

Some jumper option kinds of parameters need to be configured by software in the Falcon pair. These parameters include DRAM and ROM/Flash attributes. In order to set up these parameters correctly, software needs some way of knowing about the devices that are being used with the Falcon pair. One way of providing this information is by using the power-up status registers in the Falcon pair. At power-up reset, each Falcon latches the level on its RD0-RD63 signal pins into its power-up status registers. Since the RD signal pins are high impedance during reset, their power-up reset level can be controlled by pullup/pulldown resistors. (They are pulled-up internally.)

External Register Set

Each chip in the Falcon pair has an external register chip select pin which enables it to talk to an external set of registers. This interface is like the ROM/Flash interface but with less flexibility. It is intended for the system designer to be able to implement general-purpose status/control signals with this external set. Refer to the *Programming Model* in this chapter for a description of this register set.

CSR Accesses

An important part of the operation of a Falcon pair is that the value written to the internal control registers and SRAM in each of the two chips must be the same at all times. In order to facilitate this, writes to the pair itself are restricted to the upper Falcon only. When software writes to the upper Falcon, hardware in the two chips shifts this same value into the lower Falcon before the cycle completion is acknowledged. The shifting is done in holding registers such that the actual update of the control register happens on the same CLOCK cycle in both chips. Writes to the upper Falcon can be single-byte or 4-byte. Writes to the lower Falcon are ignored.

This duplicating of writes from upper to lower applies to the Falcon's internal registers and SRAM only. No duplication is performed for writes to DRAM, ROM/Flash, or the External Register set.

Programming Model

3

CSR Architecture

The CSR (control and status register set) consists of the chip's internal register set, its test SRAM, and its external register set. The base address of the CSR is hard coded to the address $FEF80000 (or $FEF90000 if the SIO pin is low at reset).

Accesses to the CSR are mapped differently depending on whether they are reads or writes. For reads, CSR data read on the upper half of the data bus comes from the upper Falcon while CSR data read on the lower half of the data bus comes from the lower Falcon. (See Figure 3-4.)

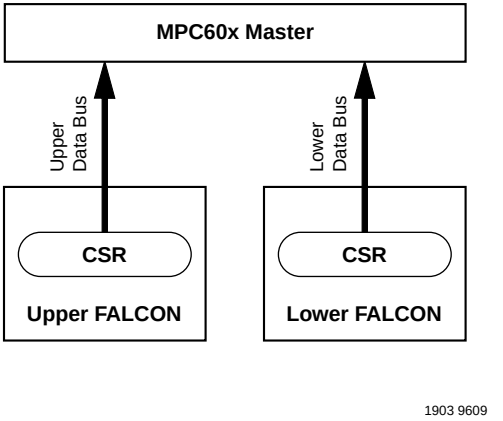

Figure 3-4. Data Path for Reads from the Falcon Internal CSRs

For writes, internal register or test SRAM data written on the upper half of the data bus goes to the upper Falcon *and is automatically copied by hardware to the lower Falcon*. Internal register or test SRAM

data written on the lower half of the data bus does not go to either Falcon in the pair, but the access is terminated normally with TA_. (See Figure 3-5.).

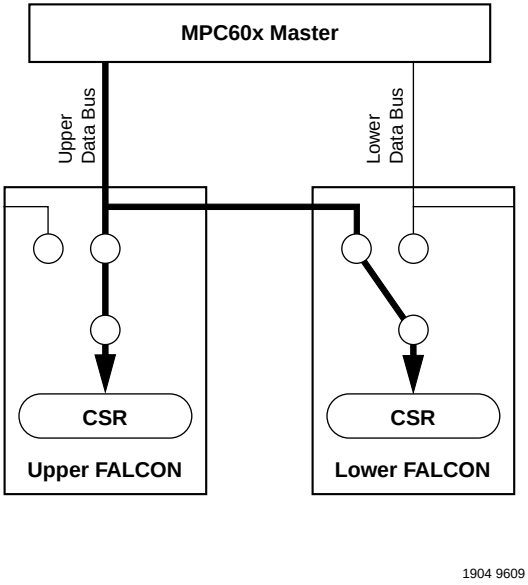

Figure 3-5. Data Path for Writes to the Falcon Internal CSRs

External register data that is written on the upper data bus goes through the upper Falcon, while data that is written on the lower data bus goes through the lower Falcon. Unlike the internal register set, *there is no automatic copying of upper data to lower data for the external register set*.

CSR read accesses can have a size of 1, 2, 4, or 8 bytes with any alignment. CSR write accesses are restricted to a size of 1 or 4 bytes and they must be aligned. Some Tester registers are limited to 4-byte only accesses. Figures 3-6, 3-7, 3-8, and 3-9 show the memory map for the different kinds of access.

$FEF80000	Upper Falcon
$FEF80001	Upper Falcon
$FEF80002	Upper Falcon
$FEF80003	Upper Falcon
$FEF80004	Lower Falcon
$FEF80005	Lower Falcon
$FEF80006	Lower Falcon
$FEF80007	Lower Falcon
$FEF80008	Upper Falcon
$FEF80009	Upper Falcon
⋮	⋮
$FEF807FF	Lower Falcon

1905 9609

Figure 3-6. Memory Map for Byte Reads to the CSR

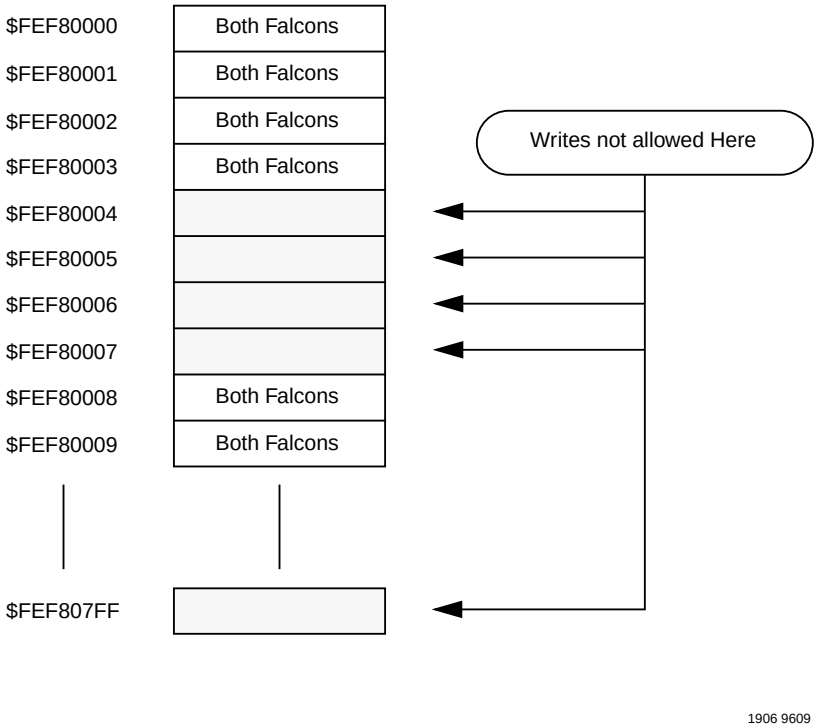

Figure 3-7. Memory Map for Byte Writes to the Internal Register Set and Test SRAM

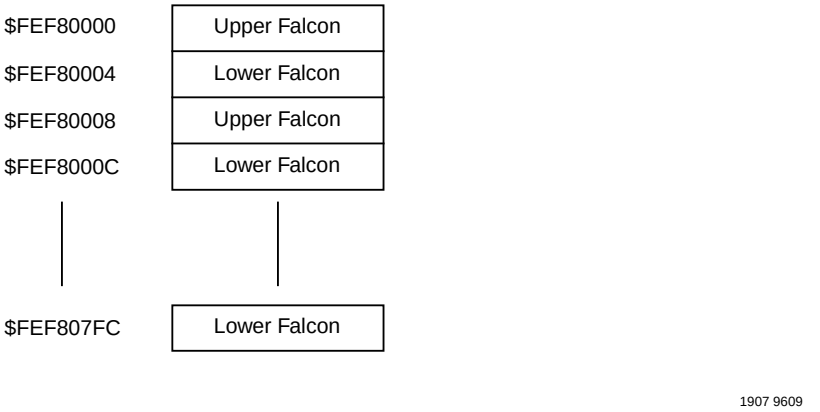

Figure 3-8. Memory Map for 4-Byte Reads to the CSR

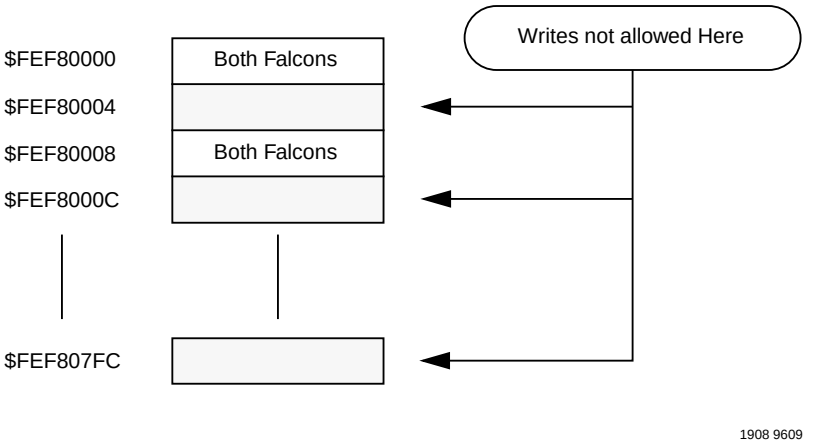

Figure 3-9. Memory Map for 4-Byte Writes to the Internal Register Set and Test SRAM

Register Summary

Table 3-9 on the following page shows a summary of the CSR. Note that the table only shows addresses for accesses to the upper Falcon. To get the addresses for accesses to the lower Falcon, add 4 to the address shown. Since the only way to write to the lower Falcon's internal register set and test SRAM is to duplicate what is written to the upper Falcon, only the addresses shown in the table should be used for writes to them. Writes to the external register set are not duplicated from upper to lower, so writes to them can be via the upper or lower Falcon.

3

Table 3-9. Register Summary

BIT # ---->	0	1	2	3	4	5	6	7	8	9	10	11	12	13	14	15	16	17	18	19	20	21	22	23	24	25	26	27	28	29	30	31
FEF80000	VENDID																DEVID															
FEF80008									REVID														aonly_en	isa_hole				adis	ram fref	ram spd0	ram spd1	chipu
FEF80010	ram a en					RAM A SIZ			ram b en					RAM B SIZ			ram c en					RAM C SIZ			ram d en					RAM D SIZ		
FEF80018	RAM A BASE								RAM B BASE								RAM C BASE								RAM D BASE							
FEF80020	CLK FREQUENCY																															por
FEF80028						refdis	nwcb	derc					scien	tien	sien	mien																mcken
FEF80030	elog				esch	esen	embt	esbt	ERROR_SYNDROME										esblk0	esblk1				scof	SBE COUNT							
FEF80038	ERROR_ADDRESS																															
FEF80040	scb0	scb1						swen						rtest0	rtest1	rtest2																
FEF80048			ROW ADDRESS																COL ADDRESS													
FEF80050	ROM A BASE												rom_a_64	ROM A SIZ																rom_a_rv	rom a en	rom a we
FEF80058	ROM B BASE												rom_b_64	ROM B SIZ																rom_b_rv	rom b en	rom b we
FEF80060	trun	tsse							tpass	tfail							tzbit														tb0	tb1
FEF80068			TEST PC																													
FEF80070			TEST A0																													
FEF80078			TEST A1																													
FEF80080																																
FEF80088																									TEST D0 (Upper 8 Bits)							
FEF80090	TEST D0 (Middle 32 Bits)																															
FEF80098	TEST D0 (Lower 32 Bits)																															

Table 3-9. Register Summary (Continued)

FEF800A0								
FEF800A8							*TEST D1 (Upper 8 Bits)*	
FEF800B0	*TEST D1 (Middle 32 Bits)*							
FEF800B8	*TEST D1 (Lower 32 Bits)*							
FEF800C0								
FEF800C8							*TEST D2 (Upper 8 Bits)*	
FEF800D0	*TEST D2 (Middle 32 Bits)*							
FEF800D8	*TEST D2 (Lower 32 Bits)*							
FEF800E0								
FEF800E8							*TEST D3 (Upper 8 Bits)*	
FEF800F0	*TEST D3 (Middle 32 Bits)*							
FEF800F8	*TEST D3 (Lower 32 Bits)*							
FEF80100	*CTR32*							
FEF80200 . . FEF803F8								
FEF80400	*PR_STAT1*							
FEF80408 . . FEF804F8								
FEF80500	*PR_STAT2*							
FEF80508 . . FEF807F8								
FEF80800 . . FEF80BF8					TEST SRAM			

3

Table 3-9. Register Summary (Continued)

FEF80C00 . . FEF87FF8																																
FEF88000 . . FEF8FFF8	*EXTERNAL REGISTER SET*																															
BIT # ---->	0	1	2	3	4	5	6	7	8	9	10	11	12	13	14	15	16	17	18	19	20	21	22	23	24	25	26	27	28	29	30	31

Notes 1. All shaded bit fields are reserved and read as zeros.

2. All status bits are shown in italics.

3. All control bits are shown with underline.

4. All control-and-status bits are shown with italics and underline.

Detailed Register Bit Descriptions

The following sections describe the registers and their bits in detail. The possible operations for each bit in the register set are as follows:

R The bit is a read only status bit.

R/W The bit is readable and writable.

R/C The bit is cleared by writing a one to itself.

C The bit is readable. Writing a zero to the bit will clear it.

The possible states of the bits after local and power-up reset are as defined below.

P The bit is affected by power-up reset.

L The bit is affected by local reset.

X The bit is not affected by reset.

V The effect of reset on the bit is variable.

Vendor/Device Register

ADDRESS	$FEF80000																															
BIT	0	1	2	3	4	5	6	7	8	9	10	11	12	13	14	15	16	17	18	19	20	21	22	23	24	25	26	27	28	29	30	31
NAME	*VENDID*																*DEVID*															
OPERATION	READ ONLY																READ ONLY															
RESET	X																X															

VENDID This read-only register contains the value $1507. It is the vendor number assigned to Motorola Inc.

Note Note that the current value ($1507) of VENDID is not correct. The correct vendor ID should be $1057. This issue will be treated as just an erratum for now.

DEVID This read-only register contains the value $4802. It is the device number for the Falcon.

Revision ID/ General Control Register

ADDRESS	$FEF80008																															
BIT	0	1	2	3	4	5	6	7	8	9	10	11	12	13	14	15	16	17	18	19	20	21	22	23	24	25	26	27	28	29	30	31
NAME									*REVID*								0	0	0	0	0	0	*aonly_en*	isa_hole	0	0	0	adis	ram fref	ram spd0	ram spd1	*chipu*
OPERATION	READ ZERO								READ ONLY								R	R	R	R	R	R	R	R/W	R	R	R	R/W	R/W	R/W	R/W	R
RESET	X								X								X	X	X	X	X	X	V P	0 PL	X	X	X	0 P	1 P	0 P	0 P	V P

REVID The *REVID* bits are hard-wired to indicate the revision level of the Falcon. The value for the first revision is $01, for the second is $02.

aonly_en Normally, the Falcon pair responds to address-only cycles only if they fall within the address range of one of its enabled map decoders. When the ***aonly_en*** bit is set, the Falcon pair also responds to address-only cycles that fall outside of the range of its enabled map decoders provided they are not acknowledged by some other slave within 8 clock periods. ***aonly_en*** is read-only and reflects the level that was on the CKD4 pin at power-up reset.

isa_hole When it is set, **isa_hole** disables any of the DRAM or ROM/Flash blocks from responding to PowerPC accesses in the range from $000A0000 to $000BFFFF. This has the effect of creating a hole in the DRAM memory map for accesses to ISA. When **isa_hole** is cleared, there is no hole created in the memory map.

adis When **adis** is clear, fast page mode operation is used for back-to-back pipelined accesses to the same page within DRAM. When it is set, RAS is cycled between accesses. This bit should normally be cleared unless the Falcon has a problem operating that way.

ram fref Some DRAMs require that they be refreshed at the rate of 7.8µs per row rather than the standard 15.6µs per row. If any of the DRAM devices require the higher rate, then the **ram fref** bit should be left set, otherwise, it can be cleared.

ram spd0,ram spd1 Together **ram spd0,ram spd1** control DRAM timing used by the Falcon pair. They are encoded as shown:

Table 3-10. ram spd1,ram spd0 and DRAM Type

ram spd0, ram spd1	DRAM Speed	DRAM Type
%00	70ns	Page Mode
%01	60ns	Page Mode
%10	-	Reserved
%11	50ns	EDO

EDO refers to DRAMs that use an output latch on data. Sometimes these parts are referred to as Hyper-Page Mode DRAMs.

To ensure reliable operation, the system should always be configured so that these two bits are encoded to match the slowest devices that are used. Also, if any parts do not support EDO, then these bits must set for Page Mode. The only case in which it is permissible to set **ram spd0,ram spd1** for "50ns, EDO" is when **all** parts are 50ns and **all** support EDO.

chipu — ***chipu*** indicates which of the two positions within the Falcon pair is occupied by this chip. When ***chipu*** is low, this chip is connected to the lower half of the PowerPC 60x data bus and it does not drive TA_ or AACK_. When ***chipu*** is high, this chip is connected to the upper half of the PowerPC 60x data bus, and it drives TA_ and AACK_. ***chipu*** reflects the level that was on the ERCS_ pin during power-up reset.

DRAM Attributes Register

ADDRESS	$FEF80010																															
BIT	0	1	2	3	4	5	6	7	8	9	10	11	12	13	14	15	16	17	18	19	20	21	22	23	24	25	26	27	28	29	30	31
NAME	ram a en	0	0	0	0	ram a siz0	ram a siz1	ram a siz2	ram b en	0	0	0	0	ram b siz0	ram b siz1	ram b siz2	ram c en	0	0	0	0	ram c siz0	ram c siz1	ram c siz2	ram d en	0	0	0	0	ram d siz0	ram d siz1	ram d siz2
OPERATION	R/W	R	R	R	R	R/W	R/W	R/W	R/W	R	R	R	R	R/W	R/W	R/W	R/W	R	R	R	R	R/W	R/W	R/W	R/W	R	R	R	R	R/W	R/W	R/W
RESET	0 PL	X	X	X	X	0 P	0 P	0 P	0 PL	X	X	X	X	0 P	0 P	0 P	0 PL	X	X	X	X	0 P	0 P	0 P	0 PL	X	X	X	X	0 P	0 P	0 P

ram a/b/c/d en — **ram a/b/c/d en** enables accesses to the corresponding block of DRAM when set, and disables them when cleared.

ram a/b/c/d siz0-2 These control bits define the size of their corresponding block of DRAM. Table 3-11 shows the block configuration assumed by the Falcon pair for each value of **ram siz0-ram siz2**.

Table 3-11. Block_A/B/C/D Configurations

ram a/b/c/d siz0-2	Block SIZE	Devices Used	Technology	Comments
%000	0MB	- - -	-	Block Not Present
%001	16MB	36 - 1Mx4's	4Mb	
		8 - 1Mx18's	16Mb	
		4 - 1Mx36's	4Mb/1Mb	SIMM/DIMM
%010	32MB	18 - 2Mx8's	16Mb	
%011	64MB	144 - 4Mx1's	4Mb	
		36 - 4Mx4's	16Mb	
		8 - 4Mx18's	64Mb	
		4 - 4Mx36's	16Mb/4Mb	SIMM/DIMM
%100	128MB	18 - 8Mx8's	64Mb	
%101	256MB	144 - 16Mx1's	16Mb	
		36 - 16Mx4's	64Mb	
		4 - 16Mx36's	64Mb/16Mb	SIMM/DIMM
%110	1024MB	144 - 64Mx1's	64Mb	
%111	0MB	- - -	-	Reserved

Note that it is important that all of the **ram a/b/c/d siz0-2** bits be set to accurately match the actual size of their corresponding blocks. This includes clearing them to %000 if their corresponding blocks are not present. Failure to do so will cause problems with addressing and with scrub error logging.

DRAM Base Register

ADDRESS	$FEF80018			
BIT	0 1 2 3 4 5 6 7	8 9 10 11 12 13 14 15	16 17 18 19 20 21 22 23	24 25 26 27 28 29 30 31
NAME	RAM A BASE	RAM B BASE	RAM C BASE	RAM D BASE
OPERATION	READ/WRITE	READ/WRITE	READ/WRITE	READ/WRITE
RESET	0 PL	0 PL	0 PL	0 PL

RAM A/B/C/D BASE These control bits define the base address for their block's DRAM. **RAM A/B/C/D BASE** bits 0-7/8-15/16-23/24-31 correspond to PowerPC 60x address bits 0 - 7. For larger DRAM sizes, the lower significant bits of **A/B/C/D BASE** are ignored. This means that the block's base address will always appear at an even multiple of its size. Note that bit 0 is MSB.

Also note that the combination of **RAM_X_BASE** and **ram_x_siz** should never be programmed such that DRAM responds at the same address as the CSR, ROM/Flash, External Register Set, or any other slave on the PowerPC bus.

CLK Frequency Register

ADDRESS	$FEF80020			
BIT	0 1 2 3 4 5 6 7	8 9 10 11 12 13 14 15	16 17 18 19 20 21 22 23	24 25 26 27 28 29 30 31
NAME	CLK FREQUENCY			0 0 0 0 0 0 0 *por*
OPERATION	READ/WRITE	READ ZERO	READ ZERO	R R R R R R R R/C
RESET	42 P	X	X	X X X X X X X 1 P

CLK FREQUENCY These bits should be programmed with the hexadecimal value of the operating CLOCK frequency in MHz (i.e. $42 for 66MHz). When these bits are programmed this way, the chip's prescale counter produces a 1MHz output. The output of the chip prescale counter is used by the

refresher/scrubber and the 32-bit counter. After power-up, this register is initialized to $42 (for 66MHz).

por — ***por*** is set by the occurrence of power up reset. It is cleared by writing a one to it. Writing a 0 to it has no effect.

ECC Control Register

ADDRESS	$FEF80028																															
BIT	0	1	2	3	4	5	6	7	8	9	10	11	12	13	14	15	16	17	18	19	20	21	22	23	24	25	26	27	28	29	30	31
NAME	0	0	0	0	0	refdis	rwcb	derc	0	0	0	0	scien	tien	sien	mien									0	0	0	0	0	0	0	mcken
OPERATION	R	R	R	R	R	R/W	R/W	R/W	R	R	R	R	R/W	R/W	R/W	R/W	READ ZERO								R	R	R	R	R	R	R	R/W
RESET	X	X	X	X	X	0 PL	0 PL	1 PL	X	X	X	X	0 PL	0 PL	0 PL	0 PL	X								X	X	X	X	X	X	X	0 PL

refdis — When set, **refdis** causes the refresher and all of its associated counters and state machines to be cleared and maintained that way until **refdis** is removed (cleared). If a refresh cycle is in process when **refdis** is updated by a write to this register, the update does not take effect until the refresh cycle has completed. This prevents the generation of illegal cycles to the DRAM when **refdis** is updated.

rwcb — **rwcb**, when set, causes reads and writes to DRAM from the PowerPC 60x bus to access check-bit data rather than normal data. The data path used for this mode is DH24-31 for check-bit data controlled by the upper Falcon, and DL24-31 for check-bit data controlled by the lower Falcon. Each 8-bit check-bit location services 64 bits of normal data. The 64 bits of data are all within the same Falcon. Each Falcon provides every other 32 bits of data in the normal mode. The figure below shows the relationship between normal data and check-bit data.

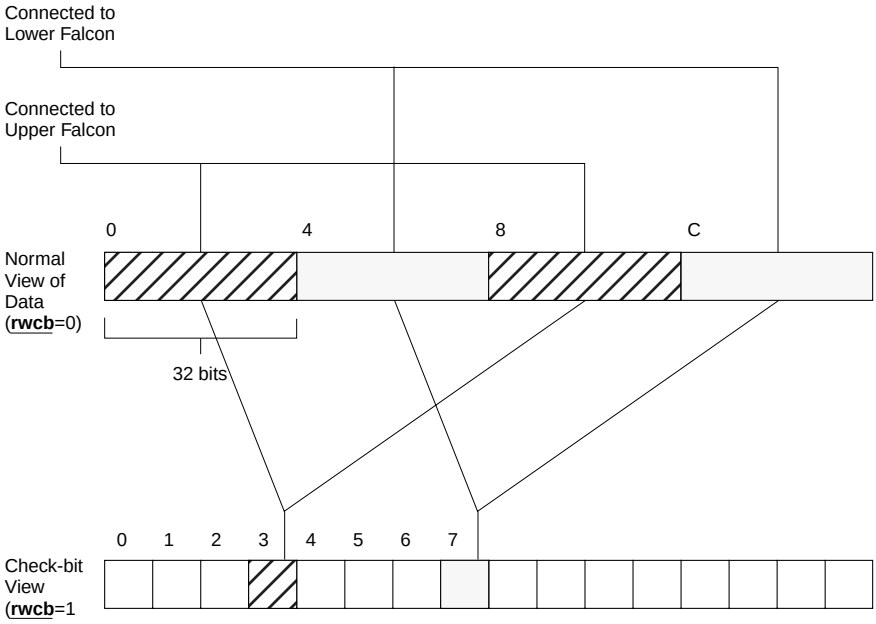

11707.00 9701

So, for example, the check-bits that correspond to the 64 bits of data found in normal mode (**rwcb**=0) at $00001000-$00001003 and $00001008-$0000100b are written and read in check-bit mode (**rwcb**=1) at location $00001003.

Note that if test software wishes to force a single-bit error to a location using the **rwcb** function, the scrubber may correct the location before the test software gets a chance to check for the single-bit error. This can be avoided by disabling scrub writes. Also note that writing bad check-bits can set the ***elog*** bit in the Error Logger Register. The writing of check-bits causes the Falcon to perform a read-modify-write to DRAM. If the location to which check-bits are being written has a single- or double-bit error, data in the location may be altered by the write check-bits operation. To avoid this, it is

recommended that the **derc** bit also be set while the **rwcb** bit is set. A possible sequence for performing read-write check-bits is as follows:

1. Disable scrub writes by clearing the **swen** bit if it is set.
2. Stop all DRAM Tester operations by clearing the **trun** bit.
3. Make sure software is not using DRAM at this point, because while **rwcb** is set, DRAM will not function as normal memory.
4. Set the **derc** and **rwcb** bits in the Data Control register.
5. Perform the desired read and/or write check-bit operations.
6. Clear the **derc** and **rwcb** bits in the Data Control register.
7. Perform the desired testing related to the location/locations that have had their check-bits altered.
8. Enable scrub writes by setting the **swen** bit if it was set before.

derc Setting **derc** to one alters Falcon pair operation as follows:

1. During reads, data is presented to the PowerPC 60x data bus uncorrected from the DRAM array.
2. During single-beat writes, data is written without correcting single-bit errors that may occur on the read portion of the read-modify-write. Check-bits are generated for the data being written.
3. During single-beat writes, the write portion of the read-modify-write happens regardless of whether there is a multiple-bit error during the read portion. No correction of data is attempted. Check-bits are generated for the data being written.
4. During refresh/scrub cycles, if **swen** is set, a read-write to DRAM happens with no attempt to correct data bits. Check-bits are generated for the data being written.

derc is useful for initializing DRAM after power-up and for testing DRAM, but it should be cleared during normal system operation.

scien When **scien** is set, the rolling over of the **SBE COUNT** register causes the INT_ signal pin to pulse true.

tien When **tien** is set, the setting of the ***tpass*** or the ***tfail*** bit causes the INT_ signal pin to pulse true.

sien When **sien** is set, the logging of a single-bit error causes the INT_ signal pin to pulse true.

mien When **mien** is set, the logging of a non-correctable error causes the INT_ signal pin to pulse true.

mcken When **mcken** is set, the detection of a multiple-bit error during a PowerPC read or write causes the Falcon to pulse its machine check interrupt request pin (MCP_) true. When **mcken** is cleared, the Falcon does not ever assert its MCP_ pin.

The Falcon never asserts its MCP_ pin in response to a multiple-bit error detected during a scrub cycle.

Caution

Note that the INT_ and MCP_ pins are the only non-polled notification that a multiple-bit error has occurred. The Falcon pair does not assert TEA as a result of a multiple bit error. In fact, the Falcon pair does not have a TEA_ signal pin and it assumes that the system does not implement TEA_.

Error Logger Register

ADDRESS	$FEF80030																															
BIT	0	1	2	3	4	5	6	7	8	9	10	11	12	13	14	15	16	17	18	19	20	21	22	23	24	25	26	27	28	29	30	31
NAME	*elog*	0	0	0	*escb*	*esen*	*embt*	*esbt*	***ERROR_SYNDROME***								0	0	*eblk0*	*eblk1*	0	0	0	*scof*	***SBE_COUNT***							
OPERATION	R/C	R	R	R	R	R/W	R	R	READ ONLY								R	R	R	R	R	R	R	R/C	READ/WRITE							
RESET	0 P	X	X	X	X P	0 PL	X P	X P	X P								X	X	X	X	X	X	X	0 P	0 P							

The Error Logger and Error Address Registers behave the same as the other registers, in that data written to the upper Falcon is automatically duplicated in the lower Falcon. They also behave the same as the other registers, in that status read from the upper Falcon pertains to the upper Falcon, and status read from the lower Falcon pertains to the lower Falcon. Unlike most of the other registers, however, it is normal for this status to differ between the two. This is due to the fact that each Falcon is connected to its own set of DRAMs. The upper Falcon can log an error during a cycle and the local Falcon not, or vice-versa. Or they can both log an error during the same cycle and have the attributes of the errors differ.

Because of the above, software needs to monitor both the upper and lower Falcon's Error Logger and Error Address Registers. This includes checking the ***elog*** bit from the upper Falcon and from the lower Falcon. When the upper Falcon logs an error, it updates its attribute bits (***escb***, ***embt***, ***esbt***, ***ERROR_SYNDROME***, ***eblk0***, ***eblk1***, and ***ERROR_ADDRESS***) to match the results of the read cycle for its portion of the DRAM array. When the lower Falcon logs an error, it updates its attribute bits to match the results of the read cycle for its portion of the DRAM array.

While the logging of errors by one Falcon in a pair does not affect the logging of errors by the other, writing to the Error Logger Register control bits affects both Falcons. This is of particular interest as regards the ***elog*** bit. Writing a one to the ***elog*** bit clears the ***elog*** bit for both the upper and lower Falcons. Because of this,

software needs to check the status of both upper and lower Error Logger and Error Address Registers before it clears the ***elog*** bits. Otherwise, it could miss a logged error.

elog When set, ***elog*** indicates that a single- or a multiple-bit error has been logged by its Falcon. If ***elog*** is set by a multiple-bit error, then no more errors will be logged until software clears it. If ***elog*** is set by a single-bit error, then no more single-bit errors will be logged until software clears it, however if ***elog*** is set by a single-bit error and a multiple-bit error occurs, the multiple-bit error *will* be logged and the single-bit error information overwritten. ***elog*** can only be set by the logging of an error and cleared by the writing of a one to itself or by power-up reset.

escb ***escb*** indicates the entity that was accessing DRAM at the last logging of a single- or multiple-bit error by its Falcon. If ***escb*** is 1, it indicates that the scrubber was accessing DRAM. If ***escb*** is 0, it indicates that the PowerPC 60x bus master was accessing DRAM. Note that the DRAM Tester cannot cause an error to be logged.

esen When set, **esen** allows errors that occur during scrubs to be logged. When cleared, **esen** does not allow errors that occur during scrubs to be logged.

embt ***embt*** is set by the logging of a multiple-bit error in its Falcon. It is cleared by the logging of a single-bit error in its Falcon. It is undefined after power-up reset. A Falcon's syndrome code is meaningless if its ***embt*** bit is set.

esbt ***esbt*** is set by the logging of a single-bit error in its Falcon. It is cleared by the logging of a multiple-bit error in its Falcon. When a Falcon logs a single-bit error, its syndrome code indicates which bit was in error. (Refer to the section on *ECC Codes*.)

ERROR_SYNDROME ***ERROR_SYNDROME*** reflects the syndrome value at the last logging of an error by its Falcon. This eight-bit code indicates the position of the data error. When all the bits are zero, there was no error. Note that if the logged error was non-correctable, then these bits are meaningless. Refer to the section on *ECC Codes* for a decoding of the syndromes.

esblk0,esblk1 Together these two bits indicate which block of DRAM was being accessed when their Falcon logged a scrub error. ***esblk0,esblk1*** are 0,0 for Block A; 0,1 for Block B; 1,0 for Block C; and 1,1 for Block D.

scof ***scof*** is set by the ***SBE COUNT*** register rolling over from $FF to $00. It is cleared by software writing a 1 to it.

SBE COUNT This register keeps track of the number of single-bit errors that have occurred since it was last cleared. It counts up by one each time its half of the Falcon pair detects a single-bit error (independent of the state of the elog bit). It is cleared by power-up reset and by software writing all zeros to it. When ***SBE COUNT*** rolls over from $FF to $00, its Falcon sets the ***scof*** bit. It also pulses the INT_ signal low if the **scien** bit is set.

Error_Address Register

ADDRESS	$FEF80038																															
BIT	0	1	2	3	4	5	6	7	8	9	10	11	12	13	14	15	16	17	18	19	20	21	22	23	24	25	26	27	28	29	30	31
NAME	*ERROR_ADDRESS*																												0	0	0	0
OPERATION	READ ONLY																												R	R	R	R
RESET	X P																												X	X	X	X

ERROR_ADDRESS These bits reflect the value that corresponds to bits 0-27 of the PowerPC 60x address bus when their Falcon last logged an error during a PowerPC access to DRAM. They reflect the value of the DRAM row and column addresses if the error was logged during a scrub cycle. In this case, bits 2-14 correspond to row address signals 0-12 respectively and bits 15-27 correspond to column address signals 0-12 respectively. Refer to Table 3-18 in the subsection on *Sizing DRAM* in the section on *Software Considerations*. It shows how PowerPC addresses correspond to DRAM row and column addresses.

Scrub/Refresh Register

ADDRESS	$FEF80040																															
BIT	0	1	2	3	4	5	6	7	8	9	10	11	12	13	14	15	16	17	18	19	20	21	22	23	24	25	26	27	28	29	30	31
NAME	*scb0*	*scb1*	0	0	0	0	0	swen	0	0	0	0	0	rtest0	rtest1	rtest2																
OPERATION	R	R	R	R	R	R	R	R/W	R	R	R	R	R	R/W	R/W	R/W	READ ZERO								READ ZERO							
RESET	0 P	0 P	X	X	X	X	X	0 P	X	X	X	X	X	0 P	0 P	0 P	X								X							

scb0,scb1 These bits increment every time the scrubber completes a scrub of the entire DRAM. When these bits reach binary 11, they roll over to binary 00 and continue. They are cleared by power-up reset.

swen When set, **swen** allows the scrubber to perform write cycles. When cleared, **swen** prevents scrubber writes.

rtest0,1,2 The **rtest** bits enable certain refresh counter test modes. Table 3-12 shows their encodings. Note that these test modes are not intended to be used once the chip is in a system.

Table 3-12. rtest encodings

rtest0,rtest1,rtest2	Test Mode selected
%000	Normal Counter Operation
%001	RA counts at 16x
%010	RA counts at 256x
%011	RA is always at roll value for CA
%100	CA counts at 16x
%101	CA counts at 256x
%110	reserved
%111	reserved

Refresh/Scrub Address Register

ADDRESS	$FEF80048																															
BIT	0	1	2	3	4	5	6	7	8	9	10	11	12	13	14	15	16	17	18	19	20	21	22	23	24	25	26	27	28	29	30	31
NAME	0	0	0	*ROW ADDRESS*													0	0	0	*COL ADDRESS*												
OPERATION	R	R	R	READ/WRITE													R	R	R	READ/WRITE												
RESET	X	X	X	0 P													X	X	X	0 P												

ROW ADDRESS These bits form the row address counter used by the refresher/scrubber for all blocks of DRAM. The row address counter increments by one after each refresh/scrub cycle. When it reaches all 1s, it rolls back over to all 0s and continues counting. ***ROW ADDRESS*** is readable and writable for test purposes.

Note that within each block, the most significant bits of ***ROW ADDRESS*** are used only when their DRAM devices are large enough to require them.

COL ADDRESS These bits form the column address counter used by the refresher/scrubber for all blocks of DRAM. The counter increments by one every eighth time the ***ROW ADDRESS*** rolls over. ***COL ADDRESS*** is readable and writable for test purposes.

Note that within each block, the most significant bits of ***COL ADDRESS*** are only used when their DRAM devices are large enough to require them.

ROM A Base/Size Register

ADDRESS	$FEF80050																															
BIT	0	1	2	3	4	5	6	7	8	9	10	11	12	13	14	15	16	17	18	19	20	21	22	23	24	25	26	27	28	29	30	31
NAME	ROM A BASE												*rom_a_64*	rom_a_siz0	rom_a_siz1	rom_a_siz2									0	0	0	0	0	*rom_a_rv*	rom_a_en	rom_a_we
OPERATION	READ/WRITE												R	R/W	R/W	R/W	READ ZERO								R	R	R	R	R	R/W	R/W	R/W
RESET	$FF0 PL												V P	0 PL	0 PL	0 PL	X								X	X	X	X	X	V P	0 PL	0 PL

ROM A BASE These control bits define the base address for ROM/Flash Block A. **ROM A BASE** bits 0-11 correspond to PowerPC 60x address bits 0 - 11 respectively. For larger ROM/Flash sizes, the lower significant bits of **ROM A BASE** are ignored. This means that the block's base address will always appear at an even multiple of its size. **ROM A BASE** is initialized to $FF0 at power-up or local bus reset.

Note that in addition to the programmed address, the first **1Mbyte of Block A also appears at $FFF00000 - $FFFFFFFF** if the ***rom_a_rv*** bit is set and the ***rom_b_rv*** bit is cleared.

Also note that the combination of **ROM_A_BASE** and **rom_a_siz** should never be programmed such that ROM/Flash Block A responds at the same address as the CSR, DRAM, External Register Set, or any other slave on the PowerPC bus.

rom_a_64 ***rom_a_64*** indicates the width of ROM/Flash device/devices being used for Block A. When ***rom_a_64*** is cleared, Block A is 16 bits wide, where each Falcon interfaces to 8 bits. When ***rom_a_64*** is set, Block A is 64 bits wide, where each Falcon interfaces to 32 bits. ***rom_a_64*** matches the value that was on the CKD2 pin at power-up reset. It cannot be changed by software.

rom a siz The **rom a siz** control bits are the size of ROM/Flash for Block A. They are encoded as shown in Table 3-13.

Table 3-13. ROM Block A Size Encoding

rom a siz	BLOCK SIZE
%000	1MB
%001	2MB
%010	4MB
%011	8MB
%100	16MB
%101	32MB
%110	64MB
%111	Reserved

rom_a_rv ***rom_a_rv*** and ***rom_b_rv*** determine which if either of Blocks A and B is the source of reset vectors or any other access in the range $FFF00000 - $FFFFFFFF as shown in the table below.

Table 3-14. *rom_a_rv* and *rom_b_rv* encoding

rom_a_rv	*rom_b_rv*	Result
0	0	Neither Block is the source of reset vectors.
0	1	Block B is the source of reset vectors.
1	0	Block A is the source of reset vectors.
1	1	Block B is the source of reset vectors.

rom_a_rv is initialized at power-up reset to match the value on the CKD0 pin.

rom a en When **rom a en** is set, accesses to Block A ROM/Flash in the address range selected by **ROM A BASE** are enabled. When **rom a en** is cleared, they are disabled.

rom a we When **rom a we** is set, writes to Block A ROM/Flash are enabled. When **rom a we** is cleared, they are disabled. Note that if ***rom_a_64*** is cleared, only 1-byte writes are allowed. If ***rom_a_64*** is set, only 4-byte writes are allowed. The Falcon ignores other writes. If a valid write is attempted and **rom a we** is cleared, the write does not happen but the cycle is terminated normally. See Table 3-15 for details of ROM/Flash accesses.

Table 3-15. Read/Write to ROM/Flash

Cycle	Transfer Size	Alignment	*rom_x_64*	rom_x_we	Falcon Response
write	1-byte	X	0	0	Normal termination, but no write to ROM/Flash
write	1-byte	X	0	1	Normal termination, write occurs to ROM/Flash
write	1-byte	X	1	X	No Response
write	4-byte	Misaligned	X	X	No Response
write	4-byte	Aligned	0	X	No Response
write	4-byte	Aligned	1	0	Normal termination, but no write to ROM/Flash
write	4-byte	Aligned	1	1	Normal termination, write occurs to ROM/Flash
write	2,3,5,6,7, 8,32-byte	X	X	X	No Response
read	X	X	X	X	Normal Termination

ROM B Base/Size Register

ADDRESS	$FEF80058																															
BIT	0	1	2	3	4	5	6	7	8	9	10	11	12	13	14	15	16	17	18	19	20	21	22	23	24	25	26	27	28	29	30	31
NAME	ROM B BASE												*rom_b_64*	rom b siz0	rom b siz1	rom b siz2									0	0	0	0	0	*rom_b_rv*	rom b en	rom b we
OPERATION	READ/WRITE												R	R/W	R/W	R/W	READ ZERO								R	R	R	R	R	R/W	R/W	R/W
RESET	$FF4 PL												V P	0 PL	0 PL	0 PL	X								X	X	X	X	X	V P	0 PL	0 PL

ROM B BASE These control bits define the base address for ROM/Flash Block B. **ROM B BASE** bits 0-11 correspond to PowerPC 60x address bits 0 - 11

respectively. For larger ROM/Flash sizes, the lower significant bits of **ROM B BASE** are ignored. This means that the block's base address will always appear at an even multiple of its size. **ROM B BASE** is initialized to $FF4 at power-up or local bus reset.

Note that in addition to the programmed address, the first **1Mbyte of Block B also appears at $FFF00000 - $FFFFFFFF** if the ***rom_b_rv*** bit is set.

Also note that the combination of **ROM_B_BASE** and **rom_b_siz** should never be programmed such that ROM/Flash Block B responds at the same address as the CSR, DRAM, External Register Set, or any other slave on the PowerPC bus.

rom_b_64 ***rom_b_64*** indicates the width of ROM/Flash device/devices being used for Block B. When ***rom_b_64*** is cleared, Block B is 16 bits wide, where each Falcon interfaces to 8 bits. When ***rom_b_64*** is set, Block B is 64 bits wide, where each Falcon interfaces to 32 bits. ***rom_b_64*** matches the *inverse* of the value that was on the CKD3 pin at power-up reset. It cannot be changed by software.

rom b siz The **rom b siz** control bits are the size of ROM/Flash for Block B. They are encoded as shown in Table 3-16.

Table 3-16. ROM Block B Size Encoding

rom b siz	BLOCK SIZE
%000	1Mbytes
%001	2Mbytes
%010	4Mbytes
%011	8Mbytes
%100	16Mbytes
%101	32Mbytes
%110	64Mbytes
%111	Reserved

rom_b_rv ***rom_b_rv*** and ***rom_a_rv*** determine which if either of Blocks A and B is the source of reset vectors or any other access in the range $FFF00000 - $FFFFFFFF as shown in Table 3-14.

rom_b_rv is initialized at power-up reset to match the *inverse* of the value on the CKD1 pin.

rom b en When **rom b en** is set, accesses to Block B ROM/Flash in the address range selected by **ROM B BASE** are enabled. When **rom b en** is cleared they are disabled.

rom b we When **rom b we** is set, writes to Block B ROM/Flash are enabled. When **rom b we** is cleared they are disabled. Refer back to Table 3-15 for more details.

DRAM Tester Control Registers

Caution

The tester should not be used by software. The **trun** and ***tsse*** bits (bits 0 and 1 of the register at address $FEF80060) should never be set.

32-Bit Counter

ADDRESS	$FEF80100																															
BIT	0	1	2	3	4	5	6	7	8	9	10	11	12	13	14	15	16	17	18	19	20	21	22	23	24	25	26	27	28	29	30	31
NAME	*CTR32*																															
OPERATION	READ/WRITE																															
RESET	0 PL																															

CTR32 ***CTR32*** is a 32-bit, free-running counter that increments once per microsecond if the CLK_FREQUENCY register has been programmed properly. Notice that ***CTR32*** is cleared by power-up and local reset. It does not exist in Revision 1 of Falcon.

Note When the system clock is a fractional frequency, such as 66.67MHz, ***CTR32*** will count at a fractional amount faster or slower than 1MHz, depending on the programming of the CLK_FREQUENCY Register.

Test SRAM

(Deleted)

Power-Up Reset Status Register 1

ADDRESS	$FEF80400																															
BIT	0	1	2	3	4	5	6	7	8	9	10	11	12	13	14	15	16	17	18	19	20	21	22	23	24	25	26	27	28	29	30	31
NAME	*PR_STAT1*																															
OPERATION	READ																															
RESET	V P																															

PR_STAT1 ***PR_STAT1*** (power-up reset status) reflects the value that was on the RD0-RD31 signal pins at power-up reset. This register is read-only.

Note For descriptions of how this register is used in the MVME2300 series boards, refer to the *Falcon-Controlled System Registers* in Chapter 1, especially the *System Configuration Register* and the *Memory Configuration Register*.

Power-Up Reset Status Register 2

ADDRESS	$FEF80500																															
BIT	0	1	2	3	4	5	6	7	8	9	10	11	12	13	14	15	16	17	18	19	20	21	22	23	24	25	26	27	28	29	30	31
NAME	*PR_STAT2*																															
OPERATION	READ																															
RESET	V P																															

PR_STAT2 ***PR_STAT2*** (power-up reset status) reflects the value that was on the RD32-RD63 signal pins at power-up reset. This register is read-only.

External Register Set

ADDRESS	$FEF88000 - $FEF8FFF8
BIT	0 1 2 3 4 5 6 7 8 9 10 11 12 13 14 15 16 17 18 19 20 21 22 23 24 25 26 27 28 29 30 31
NAME	*EXTERNAL REGISTER SET*
OPERATION	READ/WRITE
RESET	X PL

EXTERNAL REGISTER SET

The ***EXTERNAL REGISTER SET*** is user provided and is external to the Falcon pair. The Falcon pair provides a static RAM style interface for the external registers. The external registers can be SRAM, ROM, Flash or some other user device. There can be one device connected to either the upper or lower Falcon, or there can be two devices with one connected to each Falcon. The devices can be 8, 16, or 32 bits wide. The data path to the external devices is via the RD32-RD63 pins. Reads to the external devices can be any size except burst. Note that if the devices are less than 32 bits wide, reads to unused data lanes will yield undefined data. Note that writes are restricted to one or 4-byte length only. 4-byte writes can be used for any size device, data should be placed on the correct portion of the data bus so that valid data is written to the device. Data duplication is turned off for the ***EXTERNAL REGISTER SET*** so writes can be to either the upper Falcon, or to the lower Falcon.

Note For descriptions of how these registers are used in the MVME2300 series boards, refer to the *Falcon-Controlled System Registers* in Chapter 1, especially the *System External Cache Control Register* and the *CPU Control Register*.

Software Considerations

This section contains information that will be useful in programming a system that uses the Falcon pair.

Parity Checking on the PowerPC Bus

The Falcon does not generate parity on the PowerPC address or data buses. Because of this, the appropriate registers in the MPC60x should be programmed to disable parity checking for the address bus and for the data bus.

Programming ROM/Flash Devices

Those who program devices to be controlled by the Falcon should make note of the address mapping that is shown in Table 3-7 and in Table 3-8. For example, when using 8-bit devices, the code will be split so that every other 4-byte segment goes in each device.

Writing to the Control Registers

Software should not change control register bits that affect DRAM operation while DRAM is being accessed. Because of pipelining, software should always make sure that the two accesses before and after the updating of critical bits are not DRAM accesses. A possible scenario for trouble would be to execute code out of DRAM while updating the critical DRAM control register bits. The preferred method is to be executing code out of ROM/Flash and avoiding DRAM accesses while updating these bits.

Since software has no way of controlling refresh accesses to DRAM, the hardware is designed so that updating control bits coincidentally with refreshes is not a problem. An exception to this is the ***ROW_ADDRESS*** and ***COL_ADDRESS*** bits. It is not intended that software write to these bits anyway.

As with DRAM, software should not change control register bits that affect ROM/Flash while the affected Block is being accessed. This generally means that the ROM/Flash size, base address, enable, write enable, etc. are changed only while executing initially in the reset vector area ($FFF00000 - $FFFFFFFF).

Sizing DRAM

The following routine can be used to size DRAM for the Falcon.

Initialize the Falcon control register bits to a known state as follows:

1. Clear the isa_hole bit.
2. Make sure that ram_fref and ram_spd0,ram_spd1 are correct.
3. Set CLK_FREQUENCY to match the operating frequency.
4. Clear the refdis, rwcb bits.
5. Set the derc bit.
6. Clear the scien, tien, sien, and mien bits.
7. Clear the mcken bit.
8. Clear the swen and rtest0,rtest1,rtest2 bits.
9. Make sure that ROM/Flash banks A and B are not enabled to respond in the range from $00000000 to $40000000.
10. Make sure that no other devices respond in the range from $00000000 to $40000000.

For each block:

1. Set the block's base address to $00000000.
2. Enable the block and make sure that the other three blocks are disabled.
3. Set the block's size control bits. Start with the largest possible (1024MB).

4. Write differing 64-bit data patterns to certain addresses within the block. The data patterns do not matter as long as each 64-bit data pattern is unique. The addresses to be written vary depending on the size that is currently being checked and are specified in Table 3-17. Table 3-18 shows how PowerPC addresses correspond to DRAM row/column addresses.

5. Read back all of the addresses that have been written.

   If all of the addresses still contain exactly what was written then the block's size has been found. It is the size for which the block is currently programmed.

   If any of the addresses do not match exactly then the amount of memory is less than that for which it is currently programmed. Sizing needs to continue for this block by programming its control bits to the next smaller size and repeating steps 4 and 5.

6. If no match is found for any size then the block is unpopulated and has a size of 0MB.

Each size that is checked has a specific set of locations that must be written and read. The following table shows the addresses that go with each size.

Table 3-17. Sizing Addresses

1024MB	256MB	128MB	64MB	32MB	16MB
$00000000 $20000000	$00000000, $02000000, $08000000, $0A000000	$00000000 $00002000 $02000000 $02002000 $04000000 $04002000 $06000000 $06002000	$00000000 $00002000 $02000000 $02002000	$00000000 $00001000 $00002000 $00003000 $01000000 $01001000 $01002000 $01003000	$00000000

Table 3-18. PowerPC 60x Address to DRAM Address Mappings

RA ----> Block Size | V		0	1	2	3	4	5	6	7	8	9	10	11	12
16MB	ROW		A19	A18	A8	A9	A10	A11	A12	A13	A14	A15	A16	A17
	COL				A18	A19	A20	A21	A22	A23	A24	A25	A26	A27
32MB	ROW		A18	A7	A8	A9	A10	A11	A12	A13	A14	A15	A16	A17
	COL				A18	A19	A20	A21	A22	A23	A24	A25	A26	A27
64MB	ROW	A18	A6	A7	A8	A9	A10	A11	A12	A13	A14	A15	A16	A17
	COL			A6	A18	A19	A20	A21	A22	A23	A24	A25	A26	A27
128MB	ROW	A6	A5	A7	A8	A9	A10	A11	A12	A13	A14	A15	A16	A17
	COL			A6	A18	A19	A20	A21	A22	A23	A24	A25	A26	A27
256MB	ROW	A4	A5	A7	A8	A9	A10	A11	A12	A13	A14	A15	A16	A17
	COL		A4	A6	A18	A19	A20	A21	A22	A23	A24	A25	A26	A27
1024MB	ROW	A3	A5	A7	A8	A9	A10	A11	A12	A13	A14	A15	A16	A17
	COL	A2	A4	A6	A18	A19	A20	A21	A22	A23	A24	A25	A26	A27

ECC Codes

When the Falcon reports a single-bit error, software can use the syndrome that was logged by the Falcon (upper or lower depending where the error occurred) to determine which bit was in error. Table 3-19 shows the syndrome for each possible single bit error. Table 3-20 shows the same information ordered by syndrome. In order to relate this information to PowerPC addresses and bit numbers, the user needs to understand how the Falcon pair positions PowerPC data in DRAM. See the section on *Data Paths* for an explanation of this.

Note that Tables 3-19 and 3-20 are the same whether the Falcon is configured as upper or as lower.

Table 3-19. Syndrome Codes Ordered by Bit in Error

Bit	Syndrome	Bit	Syndrome	Bit	Syndrome	Bit	Syndrome	Bit	Syndrome
rd0	$4A	rd16	$92	rd32	$A4	rd48	$29	ckd0	$01
rd1	$4C	rd17	$13	rd33	$C4	rd49	$31	ckd1	$02
rd2	$2C	rd18	$0B	rd34	$C2	rd50	$B0	ckd2	$04
rd3	$2A	rd19	$8A	rd35	$A2	rd51	$A8	ckd3	$08
rd4	$E9	rd20	$7A	rd36	$9E	rd52	$A7	ckd4	$10
rd5	$1C	rd21	$07	rd37	$C1	rd53	$70	ckd5	$20
rd6	$1A	rd22	$86	rd38	$A1	rd54	$68	ckd6	$40
rd7	$19	rd23	$46	rd39	$91	rd55	$64	ckd7	$80
rd8	$25	rd24	$49	rd40	$52	rd56	$94		
rd9	$26	rd25	$89	rd41	$62	rd57	$98		
rd10	$16	rd26	$85	rd42	$61	rd58	$58		
rd11	$15	rd27	$45	rd43	$51	rd59	$54		
rd12	$F4	rd28	$3D	rd44	$4F	rd60	$D3		
rd13	$0E	rd29	$83	rd45	$E0	rd61	$38		
rd14	$0D	rd30	$43	rd46	$D0	rd62	$34		
rd15	$8C	rd31	$23	rd47	$C8	rd63	$32		

Table 3-20. Single-Bit Errors Ordered by Syndrome Code

Syn-drome	Bit	Syn-drome	Bit	Syn-drome	Bit	Syn-drome	Bit	Syn-drome	Bit	Syn-drome	Bit	Syn-drome	Bit	Syn-drome	Bit
$00	-	$20	ckd5	$40	ckd6	$60	-	$80	ckd7	$A0	-	$C0	-	$E0	rd45
$01	ckd0	$21	-	$41	-	$61	rd42	$81	-	$A1	rd38	$C1	rd37	$E1	-
$02	ckd1	$22	-	$42	-	$62	rd41	$82	-	$A2	rd35	$C2	rd34	$E2	-
$03	-	$23	rd31	$43	rd30	$63	-	$83	rd29	$A3	-	$C3	-	$E3	-
$04	ckd2	$24	-	$44	-	$64	rd55	$84	-	$A4	rd32	$C4	rd33	$E4	-
$05	-	$25	rd8	$45	rd27	$65	-	$85	rd26	$A5	-	$C5	-	$E5	-
$06	-	$26	rd9	$46	rd23	$66	-	$86	rd22	$A6	-	$C6	-	$E6	-
$07	rd21	$27	-	$47	-	$67	-	$87	-	$A7	rd52	$C7	-	$E7	-
$08	ckd3	$28	-	$48	-	$68	rd54	$88	-	$A8	rd51	$C8	rd47	$E8	-
$09	-	$29	rd48	$49	rd24	$69	-	$89	rd25	$A9	-	$C9	-	$E9	rd4
$0A	-	$2A	rd3	$4A	rd0	$6A	-	$8A	rd19	$AA	-	$CA	-	$EA	-
$0B	rd18	$2B	-	$4B	-	$6B	-	$8B	-	$AB	-	$CB	-	$EB	-
$0C	-	$2C	rd2	$4C	rd1	$6C	-	$8C	rd15	$AC	-	$CC	-	$EC	-
$0D	rd14	$2D	-	$4D	-	$6D	-	$8D	-	$AD	-	$CD	-	$ED	-
$0E	rd13	$2E	-	$4E	-	$6E	-	$8E	-	$AE	-	$CE	-	$EE	-
$0F	-	$2F	-	$4F	rd44	$6F	-	$8F	-	$AF	-	$CF	-	$EF	-
$10	ckd4	$30	-	$50	-	$70	rd53	$90	-	$B0	rd50	$D0	rd46	$F0	-
$11	-	$31	rd49	$51	rd43	$71	-	$91	rd39	$B1	-	$D1	-	$F1	-
$12	-	$32	rd63	$52	rd40	$72	-	$92	rd16	$B2	-	$D2	-	$F2	-
$13	rd17	$33	-	$53	-	$73	-	$93	-	$B3	-	$D3	rd60	$F3	-
$14	-	$34	rd62	$54	rd59	$74	-	$94	rd56	$B4	-	$D4	-	$F4	rd12
$15	rd11	$35	-	$55	-	$75	-	$95	-	$B5	-	$D5	-	$F5	-
$16	rd10	$36	-	$56	-	$76	-	$96	-	$B6	-	$D6	-	$F6	-
$17	-	$37	-	$57	-	$77	-	$97	-	$B7	-	$D7	-	$F7	-
$18	-	$38	rd61	$58	rd58	$78	-	$98	rd57	$B8	-	$D8	-	$F8	-
$19	rd7	$39	-	$59	-	$79	-	$99	-	$B9	-	$D9	-	$F9	-
$1A	rd6	$3A	-	$5A	-	$7A	rd20	$9A	-	$BA	-	$DA	-	$FA	-
$1B	-	$3B	-	$5B	-	$7B	-	$9B	-	$BB	-	$DB	-	$FB	-
$1C	rd5	$3C	-	$5C	-	$7C	-	$9C	-	$BC	-	$DC	-	$FC	-
$1D	-	$3D	rd28	$5D	-	$7D	-	$9D	-	$BD	-	$DD	-	$FD	-
$1E	-	$3E	-	$5E	-	$7E	-	$9E	rd36	$BE	-	$DE	-	$FE	-
$1F	-	$3F	-	$5F	-	$7F	-	$9F	-	$BF	-	$DF	-	$FF	-

Data Paths

Because of the Falcon “pair” architecture, data paths can be confusing. Figure 3-10 attempts to show the placement of data that is written by a PowerPC master to DRAM. Table 3-21 shows the same information in tabular format.

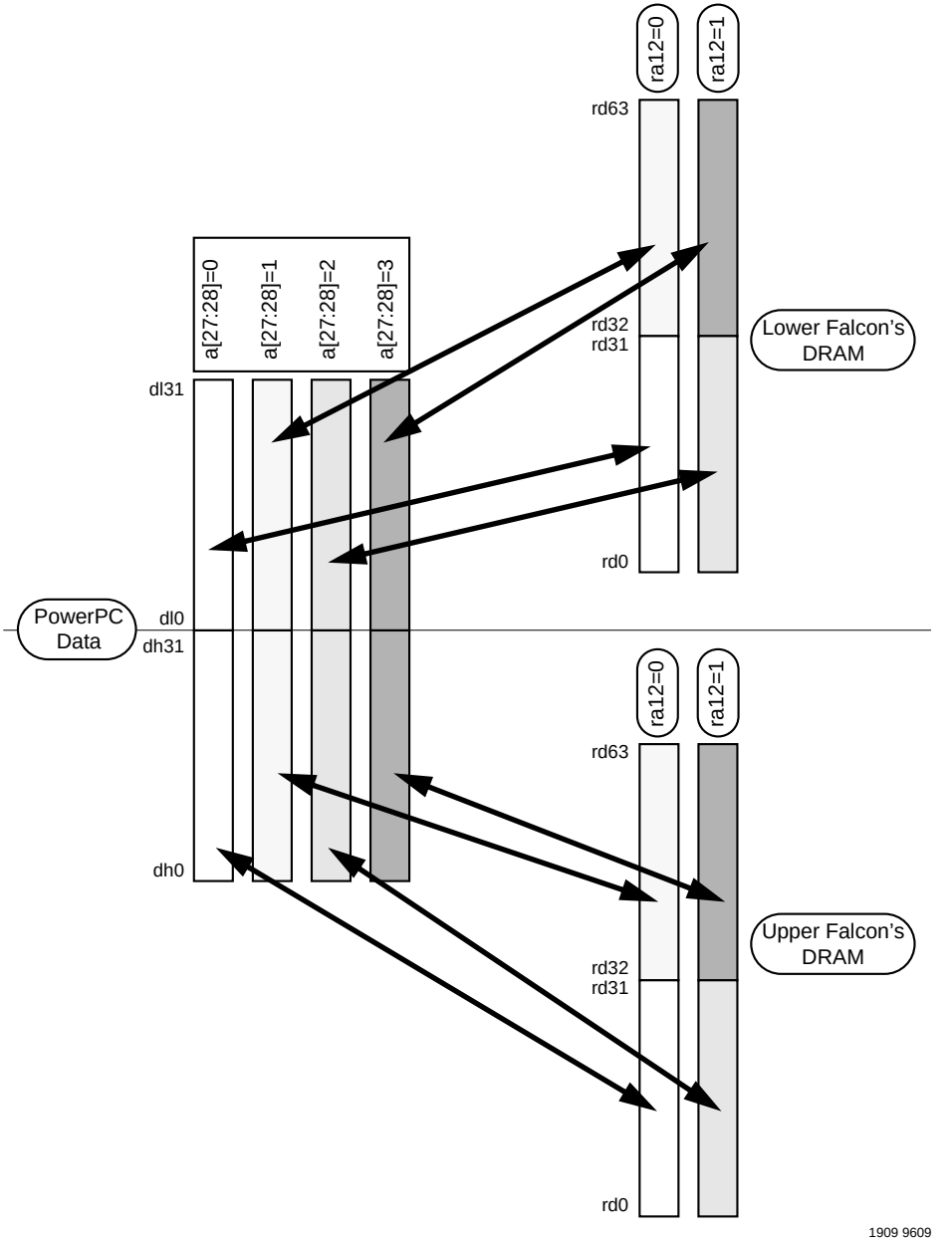

Figure 3-10. PowerPC Data to DRAM Data Correspondence

Table 3-21. PowerPC Data to DRAM Data Mapping

PowerPC			DRAM Array		
A[27]	A[28]	Data Bits	RA[12]	Upper Falcon DRAM Data Bits	Lower Falcon DRAM Data Bits
0	0	dh[00:07]	0	rd[00:07]	-
0	0	dh[08:15]	0	rd[08:15]	-
0	0	dh[16:23]	0	rd[16:23]	-
0	0	dh[24:31]	0	rd[24:31]	-
0	0	dl[00:07]	0	-	rd[00:07]
0	0	dl[08:15]	0	-	rd[08:15]
0	0	dl[16:23]	0	-	rd[16:23]
0	0	dl[24:31]	0	-	rd[24:31]
0	1	dh[00:07]	0	rd[32:39]	-
0	1	dh[08:15]	0	rd[40:47]	-
0	1	dh[16:23]	0	rd[48:55]	-
0	1	dh[24:31]	0	rd[56:63]	-
0	1	dl[00:07]	0	-	rd[32:39]
0	1	dl[08:15]	0	-	rd[40:47]
0	1	dl[16:23]	0	-	rd[48:55]
0	1	dl[24:31]	0	-	rd[56:63]
1	0	dh[00:07]	1	rd[00:07]	-
1	0	dh[08:15]	1	rd[08:15]	-
1	0	dh[16:23]	1	rd[16:23]	-
1	0	dh[24:31]	1	rd[24:31]	-
1	0	dl[00:07]	1	-	rd[00:07]
1	0	dl[08:15]	1	-	rd[08:15]
1	0	dl[16:23]	1	-	rd[16:23]
1	0	dl[24:31]	1	-	rd[24:31]
1	1	dh[00:07]	1	rd[32:39]	-
1	1	dh[08:15]	1	rd[40:47]	-
1	1	dh[16:23]	1	rd[48:55]	-
1	1	dh[24:31]	1	rd[56:63]	-
1	1	dl[00:07]	1	-	rd[32:39]
1	1	dl[08:15]	1	-	rd[40:47]
1	1	dl[16:23]	1	-	rd[48:55]
1	1	dl[24:31]	1	-	rd[56:63]

Universe (VMEbus to PCI) Chip

4

Note All of the information in this chapter (except the section *Universe Chip Problems after a PCI Reset*) is taken from the *Universe User Manual*, which is listed in *Manufacturers' Documents* in *Appendix A*. Refer to that manual for complete information.

General Information

Introduction

The Universe VMEbus interface chip (CA91C042) provides a reliable high performance 64-bit VMEbus to PCI interface in one device.

Designed by Tundra Semiconductor Corporation in consultation with Motorola, the Universe is compliant with the VME64 specification and is tuned to the new generation of high speed processors.

The Universe is ideally suited for CPU boards acting as both master and slave in the VMEbus system, and is particularly fitted for PCI local systems. The Universe is manufactured in a CMOS process.

Product Overview - Features

- Fully compliant, 64-bit, 33 MHz PCI local bus interface
- Fully compliant, high performance 64-bit VMEbus interface
- Integral FIFOs for write posting to maximize bandwidth utilization
- Programmable DMA controller with linked list support

- VMEbus transfer rates of 60-70 MBytes/sec
- Complete suite of VMEbus address and data transfer modes
  - A32/A24/A16 master and slave
  - D64 (MBLT)/D32/D16/D08 master and slave
  - BLT, ADOH, RMW, LOCK
- Automatic initialization for slave-only applications
- Flexible register set, programmable from both the PCI bus and VMEbus ports
- Full VMEbus system controller functionality
- IEEE 1149.1 JTAG testability support, and
- Available in 313-pin Plastic BGA and 324-pin contact Ceramic BGA

Functional Description

Architectural Overview

This section introduces the general architecture of the Universe. This description makes reference to the functional block diagram provided in Figure 4-1 that follows. Notice that for each of the interfaces, VMEbus and PCI bus, there are three functionally distinct modules: master module, slave module, and interrupt module. These modules are connected to the different functional channels operating in the Universe. These channels are:

- VME Slave Channel
- PCI Bus Slave Channel
- DMA Channel
- Interrupt Channel
- Register Channel

The Architectural Overview is organized into the following sections:

- VMEbus Interface
- PCI Bus Interface
- Interrupter and Interrupt Handler
- DMA Controller

These sections describe the operation of the Universe in terms of the different modules and channels illustrated in Figure 4-1.

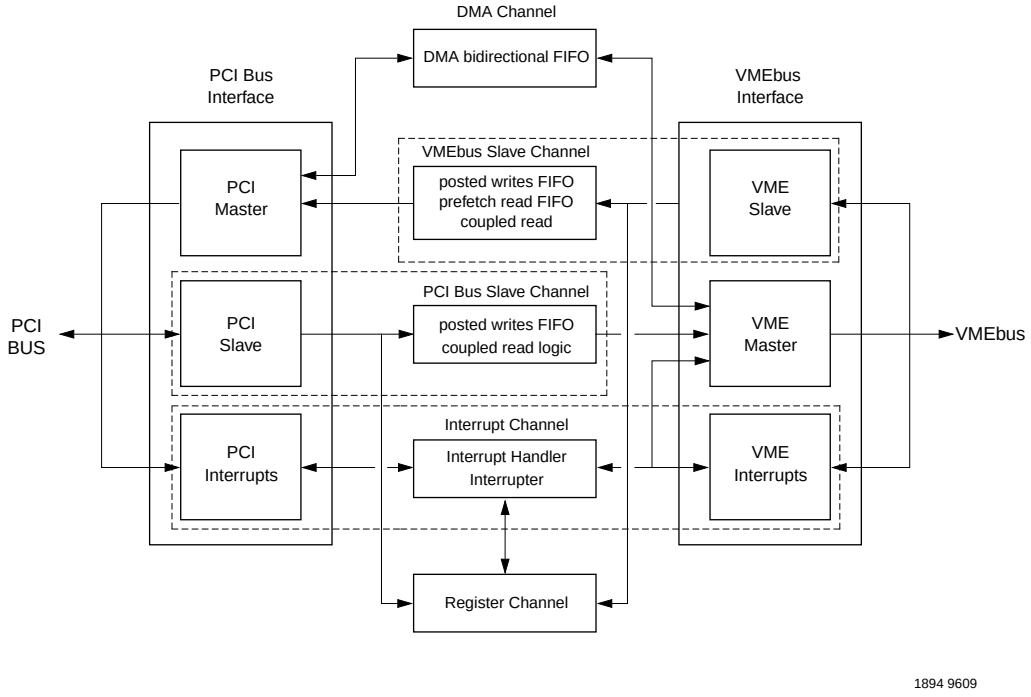

Figure 4-1. Architectural Diagram for the Universe

VMEbus Interface

Universe as VMEbus Slave

The Universe VME Slave Channel accepts all of the addressing and data transfer modes documented in the VME64 specification (except A64 and those intended to support 3U applications, i.e. A40 and MD32). Incoming write transactions from the VMEbus may be treated as either coupled or posted, depending upon the programming of the VMEbus slave image. (Refer to *VME Slave Images* in the *Universe User Manual*.) With posted write transactions, data is written to a Posted Write Receive FIFO (RXFIFO), and the VMEbus master receives data acknowledgment from the Universe. Write data is transferred to the PCI resource from the RXFIFO without the involvement of the initiating VMEbus master (Refer to *Posted Writes* in the *Universe User Manual* for a full explanation of this operation.). With a coupled cycle, the VMEbus master only receives data acknowledgment when the transaction is complete on the PCI bus. This means that the VMEbus is unavailable to other masters while the PCI bus transaction is executed.

Read transactions may be prefetched or coupled. If enabled by the user, a prefetched read is initiated when a VMEbus master requests a block read transaction (BLT or MBLT) and this mode is enabled. When the Universe receives the block read request, it begins to fill its Read Data FIFO (RDFIFO) using burst transactions from the PCI resource. The initiating VMEbus master then acquires its block read data from the RDFIFO rather than from the PCI resources directly.

Universe as VMEbus Master

The Universe becomes VMEbus master when the VME Master Interface is internally requested by the PCI Bus Slave Channel, the DMA Channel, or the Interrupt Channel. The Interrupt Channel always has priority over the other two channels. Several mechanisms are available to configure the relative priority that the PCI Bus Slave Channel and DMA Channel have over ownership of the VMEbus Master Interface.

The Universe's VME Master Interface generates all of the addressing and data transfer modes documented in the VME64 specification (except A64 and those intended to support 3U applications, i.e. A40 and MD32). The Universe is also compatible with all VMEbus modules conforming to pre-VME64 specifications. As VMEbus master, the Universe supports Read-Modify-Write (RMW), and Address-Only-with-Handshake (ADOH) but does not accept RETRY* as a termination from the VMEbus slave. The ADOH cycle is used to implement the VMEbus Lock command allowing a PCI master to lock VMEbus resources.

PCI Bus Interface

Universe as PCI Slave

Read transactions from the PCI bus are always processed as coupled. Write transactions may be either coupled or posted, depending upon the setting of the PCI bus slave image. (Refer to *PCI Bus Slave Images* in the *Universe User Manual*.) With a posted write transaction, write data is written to a Posted Write Transmit FIFO (TXFIFO) and the PCI bus master receives data acknowledgment from the Universe with zero wait states. Meanwhile, the Universe obtains the VMEbus and writes the data to the VMEbus resource independent of the initiating PCI master. (Refer to *Posted Writes* in the *Universe User Manual* for a full description of this operation.)

To allow PCI masters to perform RMW and ADOH cycles, the Universe provides a Special Cycle Generator. The Special Cycle Generator can be used in combination with a VMEbus ownership function to guarantee PCI masters exclusive access to VMEbus resources over several VMEbus transactions, and. (Refer to *Exclusive Accesses* and *RMW and ADOH Cycles* in the *Universe User Manual* for a full description of this functionality.)

Universe as PCI Master

The Universe becomes PCI master when the PCI Master Interface is internally requested by the VME Slave Channel or the DMA Channel. There are mechanisms provided which allow the user to configure the relative priority of the VME Slave Channel and the DMA Channel.

Interrupter and Interrupt Handler

Interrupter

The Universe interrupt channel provides a flexible scheme to map interrupts to either the PCI bus or VMEbus interface. Interrupts are generated from either hardware or software sources (Refer to *Interrupter* in the *Universe User Manual* for a full description of hardware and software sources.). Interrupt sources can be mapped to any of the PCI bus or VMEbus interrupt output pins. Interrupt sources mapped to VMEbus interrupts are generated on the VMEbus interrupt output pins VIRQ#[7:1]. When a software and hardware source are assigned the same VIRQn# pin, the software source always has higher priority.

Interrupt sources mapped to PCI bus interrupts are generated on one of the INT#[7:0] pins. To be fully PCI compliant, all interrupt sources must be routed to a single INT# pin.

For VMEbus interrupt outputs, the Universe interrupter supplies an 8-bit STATUS/ID to a VMEbus interrupt handler during the IACK cycle, and optionally generates an internal interrupt to signal that the interrupt vector has been provided. (Refer to *VMEbus Interrupt Generation* in the *Universe User Manual*.)

Interrupts mapped to PCI bus outputs are serviced by the PCI interrupt controller. The CPU determines which interrupt sources are active by reading an interrupt status register in the Universe. The source negates its interrupt when it has been serviced by the CPU. (Refer to *PCI Interrupt Generation* in the *Universe User Manual*.)

VMEbus Interrupt Handling

A VMEbus interrupt triggers the Universe io generate a normal VMEbus IACK cycle and generate the specified interrupt output. When the IACK cycle is complete, the Universe releases the VMEbus and the interrupt vector is read by the PCI resource servicing the interrupt output. Software interrupts are ROAK, while hardware, and internal interrupts are RORA.

DMA Controller

The Universe provides an internal DMA controller for high performance data transfer between the PCI and VMEbus. DMA operations between the source and destination bus are decoupled through the use of a single bidirectional FIFO (DMAFIFO). Parameters for the DMA transfer are software configurable in the Universe registers. (Refer to *DMA Controller* in the *Universe User Manual*.)

The principal mechanism for DMA transfers is the same for operations in either direction (PCI to VME, or VME to PCI), only the relative identity of the source and destination bus changes. In a DMA transfer, the Universe gains control of the source bus and reads data into its DMAFIFO. Following specific rules of DMAFIFO operation (refer to *FIFO Operation and Bus Ownership* in the *Universe User Manual*), it then acquires the destination bus and writes data from its DMAFIFO.

The DMA controller can be programmed to perform multiple blocks of transfers using entries in a linked list. The DMA will work through the transfers in the linked-list following pointers at the end of each linked-list entry. Linked-list operation is initiated through a pointer in an internal Universe register, but the linked list itself resides in PCI bus memory.

Registers - Universe Control and Status Registers (UCSR)

The Universe Control and Status Registers (UCSR) facilitate host system configuration and allow the user to control Universe operational characteristics. The UCSRs are divided into three groups:

- PCI Configuration Space (PCICS)
- VMEbus Control and Status Registers (VCSR), and
- Universe Device Specific Status Registers (UDSR)

The Universe registers are little-endian.

Figure 4-2 below summarizes the supported register access mechanisms.

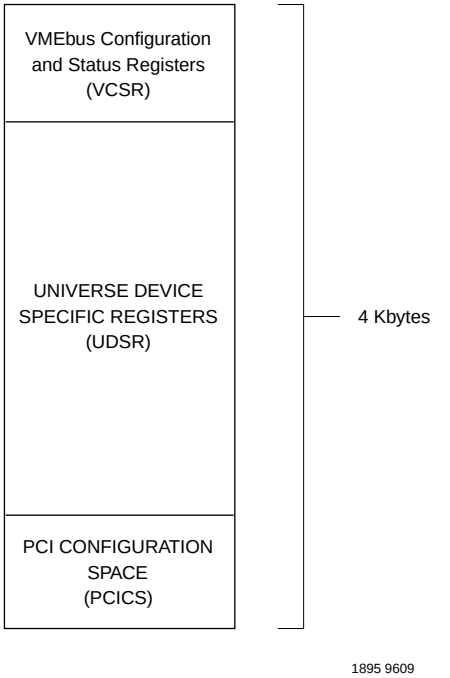

Figure 4-2. UCSR Access Mechanisms

Universe Register Map

Table 4-1 below lists the Universe registers by address offset. Tables in the *Universe User Manual* provide detailed descriptions of each register.

Address offsets in Table 4-1 below apply to accesses from the PCI bus and to accesses from the VMEbus side using the VMEbus Register Access Image (Refer to *Registers* in the *Universe User Manual*.). For register accesses in CR/CSR space, be sure to add 508 KBytes (0x7F00) to the address offsets provided in the table.

Table 4-1. Universe Register Map

Offset	Register	Name
000	PCI Configuration Space ID Register	PCI_ID
004	PCI Configuration Space Control and Status Register	PCI_CSR
008	PCI Configuration Class Register	PCI_CLASS
00C	PCI Configuration Miscellaneous 0 Register	PCI_MISC0
010	PCI Configuration Base Address Register	PCI_BS
014	PCI Unimplemented	
018	PCI Unimplemented	
01C	PCI Unimplemented	
020	PCI Unimplemented	
024	PCI Unimplemented	
028	PCI Reserved	
02C	PCI Reserved	
030	PCI Unimplemented	
034	PCI Reserved	
038	PCI Reserved	
03C	PCI Configuration Miscellaneous 1 Register	PCI_MISC1
040 - 0FF	PCI Unimplemented	

Table 4-1. Universe Register Map (Continued)

Offset	Register	Name
100	PCI Slave Image 0 Control	LSI0_CTL
104	PCI Slave Image 0 Base Address Register	LSI0_BS
108	PCI Slave Image 0 Bound Address Register	LSI0_BD
10C	PCI Slave Image 0 Translation Offset	LSI0_TO
110	Universe Reserved	
114	PCI Slave Image 1 Control	LSI1_CTL
118	PCI Slave Image 1 Base Address Register	LSI1_BS
11C	PCI Slave Image 1 Bound Address Register	LSI1_BD
120	PCI Slave Image 1 Translation Offset	LSI1_TO
124	Universe Reserved	
128	PCI Slave Image 2 Control	LSI2_CTL
12C	PCI Slave Image 2 Base Address Register	LSI2_BS
130	PCI Slave Image 2 Bound Address Register	LSI2_BD
134	PCI Slave Image 2 Translation Offset	LSI2_TO
138	Universe Reserved	
13C	PCI Slave Image 3 Control	LSI3_CTL
140	PCI Slave Image 3 Base Address Register	LSI3_BS
144	PCI Slave Image 3 Bound Address Register	LSI3_BD
148	PCI Slave Image 3 Translation Offset	LSI3_TO
14C - 16C	Universe Reserved	
170	Special Cycle Control Register	SCYC_CTL
174	Special Cycle PCI bus Address Register	SCYC_ADDR
178	Special Cycle Swap/Compare Enable Register	SCYC_EN
17C	Special Cycle Compare Data Register	SCYC_CMP
180	Special Cycle Swap Data Register	SCYC_SWP

Table 4-1. Universe Register Map (Continued)

Offset	Register	Name
184	PCI Miscellaneous Register	LMISC
188	Special PCI Slave Image	SLSI
18C	PCI Command Error Log Register	L_CMDERR
190	PCI Address Error Log	LAERR
194 - 1FC	Universe Reserved	
200	DMA Transfer Control Register	DCTL
204	DMA Transfer Byte Count Register	DTBC
208	DMA PCI bus Address Register	DLA
20C	Universe Reserved	
210	DMA VMEbus Address Register	DVA
214	Universe Reserved	
218	DMA Command Packet Pointer	DCPP
21C	Universe Reserved	
220	DMA General Control and Status Register	DGCS
224	DMA Linked List Update Enable Register	D_LLUE
228 - 2FC	Universe Reserved	
300	PCI Interrupt Enable	LINT_EN
304	PCI Interrupt Status	LINT_STAT
308	PCI Interrupt Map 0	LINT_MAP0
30C	PCI Interrupt Map 1	LINT_MAP1
310	VMEbus Interrupt Enable	VINT_EN
314	VMEbus Interrupt Status	VINT_STAT
318	VMEbus Interrupt Map 0	VINT_MAP0
31C	VMEbus Interrupt Map 1	VINT_MAP1
320	Interrupt Status/ID Out	STATID

Table 4-1. Universe Register Map (Continued)

Offset	Register	Name
324	VIRQ1 STATUS/ID	V1_STATID
328	VIRQ2 STATUS/ID	V2_STATID
32C	VIRQ3 STATUS/ID	V3_STATID
330	VIRQ4 STATUS/ID	V4_STATID
334	VIRQ5 STATUS/ID	V5_STATID
338	VIRQ6 STATUS/ID	V6_STATID
33C	VIRQ7 STATUS/ID	V7_STATID
340 - 3FC	Universe Reserved	
400	Master Control	MAST_CTL
404	Miscellaneous Control	MISC_CTL
408	Miscellaneous Status	MISC_STAT
40C	User AM Codes Register	USER_AM
410 - EFC	Universe Reserved	
F00	VMEbus Slave Image 0 Control	VSI0_CTL
F04	VMEbus Slave Image 0 Base Address Register	VSI0_BS
F08	VMEbus Slave Image 0 Bound Address Register	VSI0_BD
F0C	VMEbus Slave Image 0 Translation Offset	VSI0_TO
F10	Universe Reserved	
F14	VMEbus Slave Image 1 Control	VSI1_CTL
F18	VMEbus Slave Image 1 Base Address Register	VSI1_BS
F1C	VMEbus Slave Image 1 Bound Address Register	VSI1_BD
F20	VMEbus Slave Image 1 Translation Offset	VSI1_TO
F24	Universe Reserved	
F28	VMEbus Slave Image 2 Control	VSI2_CTL
F2C	VMEbus Slave Image 2 Base Address Register	VSI2_BS

Table 4-1. Universe Register Map (Continued)

Offset	Register	Name
F30	VMEbus Slave Image 2 Bound Address Register	VSI2_BD
F34	VMEbus Slave Image 2 Translation Offset	VSI2_TO
F38	Universe Reserved	
F3C	VMEbus Slave Image 3 Control	VSI3_CTL
F40	VMEbus Slave Image 3 Base Address Register	VSI3_BS
F44	VMEbus Slave Image 3 Bound Address Register	VSI3_BD
F48	VMEbus Slave Image 3 Translation Offset	VSI3_TO
F4C - F6C	Universe Reserved	
F70	VMEbus Register Access Image Control Register	VRAI_CTL
F74	VMEbus Register Access Image Base Address	VRAI_BS
F78	Universe Reserved	
F7C	Universe Reserved	
F80	VMEbus CSR Control Register	VCSR_CTL
F84	VMEbus CSR Translation Offset	VCSR_TO
F88	VMEbus AM Code Error Log	V_AMERR
F8C	VMEbus Address Error Log	VAERR
F90 - FEC	Universe Reserved	
FF0	VME CR/CSR Reserved	
FF4	VMEbus CSR Bit Clear Register	VCSR_CLR
FF8	VMEbus CSR Bit Set Register	VCSR_SET
FFC	VMEbus CSR Base Address Register	VCSR_BS

Caution

Register space marked as “Reserved” should not be overwritten. Unimplemented registers return a value of 0 on reads; writes complete normally.

Universe Chip Problems after a PCI Reset

Under the conditions described below, there are problems with the Universe chip after a PCI reset.

Problem Description

The Universe chip is being enabled on the PCI bus after a PCI reset. The problem does not occur after a board reset or power up.

The Universe is causing the "bye" command to hang the system. The Universe Master Enable and Memory Enable in the PCI_CSR (Configuration Space register) are enabled, even before the PCI_BS register has been initialized. The symptoms can be alleviated by modifying the PCI probe list such that the Universe PCI configuration is done first.

The Configuration Space enables are not the only things enabled after a PCI reset. The LSI0 image may also not be disabled by a PCI reset, regardless of the enable bit's Power Up condition. If the image is active at the time the reset occurs, it will remain enabled through the reset. Additionally, the image is not staying at the same VME or PCI address range.

MCG is not sure how many of the Power Up (P/U) Option bits actually get latched as the Universe manual indicates they should. At least the EN bit in the LSI0_CTL bit is not latched; in our board, its P/U state is disabled but is not honored.

The software cannot completely correct this problem, but it can minimize it. Two methods are presented:

Method 1:

1. Modify the PCI probe code to disable each PCI device prior to writing its configuration space BS registers. This will prevent the Universe from being active on the PCI bus while it has a base addr of 0.
2. Once the Universe has been assigned a valid PCI Base Address, enable register space access and disable the LSI0 slave image by clearing the EN bit of the LSI0_CTL register.

Method 2:

The port 92 reset code can be modified to disable the LSI0 image prior to propagating the reset. This will cause the LSI0 image to come up disabled.

We at MCG understand that both of these methods are awkward, because the PCI probe/reset code should not contain any device-specific patches. It should only need to follow the probing conventions of the PCI specification. However, the only other option appears to be avoidance of the LSI0 image altogether.

Tundra engineering describes the problem thus:

"Following are the most recently discovered bugs which will be addressed in Universe 1.1.

1. LSIO image

Description: After a PCI reset, the LSIO image is still enabled, but the base, bound, and translation offset changes value.

Workaround: None."

Motorola Firmware Engineering has implemented firmware work-around Method 1 in the PPCBug debugger release 3.1.

Note The above notes describing this Universe chip PCI reset problem are for those customers who replace the MCG firmware with their own. Many of these customers replace Motorola's firmware, or overwrite the firmware settings for the Universe chip. These customers may run into this problem.

Customers should not encounter any problems if they leave Motorola's PPCBug debugger intact.

Examples

Example 1: MVME2600 Series Board Exhibits Problem

Use an MVME2600 series board to exhibit the problem.

Conditions:

MVME260x
running PPCOF2.0 Ir05
all the Universe code which initializes the Universe has been disabled (not the PCI code, the driver code)
modified probe list to d,c,e,f,10
env parameters set such that LSI0 image will be enabled

1. Manually call each Universe initialize word, to duplicate typical operation.

   With the LSI0 enabled, the registers are:

   ```
   CTL        BS       BD       TO
   80821000 1012000 21012000 3efee000
   ```

2. Execute a bye command.

3. Manually enable access to the Universe register set, and read the LSI0 registers:

   ```
   CTL        BS       BD       TO
   80820000    0     20000000    0
   ```

   This means that the PCI reset changed the image as follows:

   from supervisor address modifier to user
   from PCI space base address 1012000 to 0 (size of 2000.0000 constant)
   from VME address range 4000.0000 thru 5fff.ffff to a new VMEbus range of 0 thru 1fff.ffff

   It is still enabled.

Example 2: MVME3600 Series Board Acts Differently

Repeat portions of the earlier example on an MVME3600 series board. This board had not previously been seen to hang upon PCI reset. This particular board had customized values for the LSI0 setup parameters.

The Universe register init code is still disabled, and must be manually called. The PCI init code is enabled, so the Universe PCI memory space requirement defined by its Configuration Space register at offset 0x10 is being accommodated and enabled during PCI probing. PCI probe list d,c,e,f,10

1. After a P/U reset, before the init code has written the registers, the LSI0 register settings are:

   ```
   CTL        BS        BD        TO
   800000      0         0         0
   ```

2. Run the init code and the LSI0 registers become:

   ```
   CTL        BS        BD        TO
   80821000 3000000 300a000 4d000000
   ```

3. After a bye, before the init code has run:

   ```
   CTL        BS        BD        TO
   80820000    0         0         0
   ```

   Therefore the PCI reset caused the following changes in the LSI0 image:

   from supervisor to user
   from PCI space base address 300.0000 to 0
   from PCI space size of a000 to size of 0
   from a VME base address of 5000.0000 to 0

   This explains why it has never been a problem on this particular MVME360x. The fact that the PCI base and PCI bound registers are both 0 makes the effective size of the image 0 bytes. Therefore this "enabled" image will never utilize any PCI address space.

4. Now try modifying the LSI0 env parameters, to be the same as those on the MVME260x which failed:

   ```
   printenv
   vme3_lsi0_vmeaddr   1073741824    1073741824
   vme3_lsi0_size      536870912     536870912
   vme3_lsi0_phi       77            77
   ```

   After a power-up, before the init code ran, the LSI0 values are:

   ```
   800000 0 0 0
   ```

5. Do NOT run the init code, but press push-button RESET, and the values become:

   ```
   830001 f0000000 f0000000 0
   ```

6. Run the vme3 init code, and the values are set to accommodate env parameters:

   ```
   80821000 3000000 23000000 3d000000
   ```

7. Do a bye

   The values before the init code runs are:

   ```
   80820000 0 20000000 0
   ```

   This gets the same results with the MVME360x as with the MVME260x, and the difference seen earlier is related to the values of the LSI0 slave at the time the PCI reset occurred.

Example 3: Universe Chip is Checked at Tundra

An engineer at Tundra Semiconductor Corporation had run a simulation on the LSI0_CTL register, and could see that it was going to be enabled after a port 92 reset. Motorola engineers mentioned that the problem is primarily with the _BS, _BD, and _TO registers. He said he would run more simulations to look at the outcome on those registers. Motorola engineers explained what they had seen.

The engineer at Tundra re-ran the simulation based on the information given him. He saw exactly what the Motorola engineers had seen, i.e., that the LSI0_BS, LSI0_BD, and LSI0_TO values change, as well as the LSI0_CTL fields for program, super, and vct. He checked to see if this is in fact what the Universe is supposed to do.

The following are his results:

```
Register   Before RST#   After RST#
--------   -----------   -----------
LSI0_CTL   8082_5FFF     8082_0001
LSI0_BS    FFFF_FFFF     F000_0000
LSI0_BD    FFFF_FFFF     F000_0000
LSIO_TO    FFFF_FFFF     0000_0000
```

Explanation:

All the fields in the LSI0 registers which are "Power-up Options" cannot be reset by assertion of RST# (PCI reset).

The following fields in the LSIO registers cannot be reset by a PCI reset:

LSI0_CTL register: EN, VAS, LAS
LSI0_BS register: Bits [31:28]
LSI0_BD register: Bits [31:28]

All the other fields in the LSI0 registers are reset to 0, which explains why the PGM and SUPER fields changed, the translation offset reset to 0, etc.

Programming Details 5

Introduction

This chapter contains details of several programming functions that are not tied to any specific ASIC chip.

PCI Arbitration

PCI arbitration is performed by the PCI-to-ISA Bridge (PIB) which supports six PCI external PCI masters. The PIB can also be a PCI master for ISA DMA functions. The arbitration assignments on the MVME2300 series are as follows:

Table 5-1. PCI Arbitration Assignments

PCI BUS REQUEST	PCI Master(s)
PIB (internal)	PIB
CPU	Raven ASIC
Request 0	PMC Slot 2
Request 1	PMC Slot 1
Request 2	PCIX Slot
Request 3	Ethernet
Request 4	Universe ASIC (VMEbus)

Upon power-up, the PIB defaults to a “round-robin” arbitration mode. The relative priority of each request/grant pair can be customized via the PCI Priority Control Register 1. Refer to the W83C553 Data Book for additional details.

Interrupt Handling

The interrupt architecture of the MVME2300 series SBC is shown in the following figure:

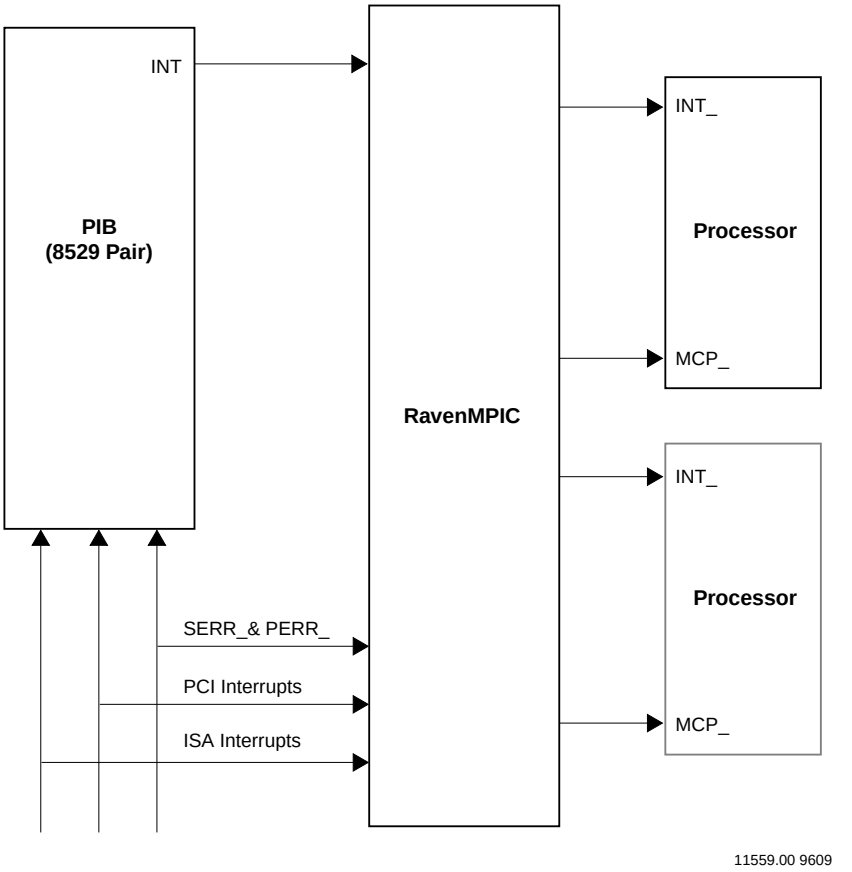

Figure 5-1. MVME2300 Series Interrupt Architecture

RavenMPIC

The Raven ASIC has a built-in interrupt controller that meets the Multi-Processor Interrupt Controller (MPIC) Specification. This MPIC supports up to two processors and 16 external interrupt sources. There are also six other interrupt sources inside the MPIC: Two cross-processor interrupts and four timer interrupts. All ISA interrupts go through the 8259 pair in the PIB. The output of the PIB then goes through the MPIC in the Raven. Refer to Chapter 2 on the Raven for details on the RavenMPIC. The following table shows the interrupt assignments for the RavenMPIC on the MVME2300 series:

Table 5-2. RavenMPIC Interrupt Assignments

MPIC IRQ	Edge/ Level	Polarity	Interrupt Source	Notes
IRQ0	Level	High	PIB (8259)	1
IRQ1	Edge	Low	Falcon-ECC Error	2
IRQ2	Level	Low	PCI-Ethernet	4
IRQ3	N/A	N/A	Not used	
IRQ4	N/A	N/A	Not used	
IRQ5	Level	Low	PCI-VME INT 0 (Universe LINT0#)	3, 4
IRQ6	Level	Low	PCI-VME INT 1 (Universe LINT1#)	3
IRQ7	Level	Low	PCI-VME INT 2 (Universe LINT2#)	3
IRQ8	Level	Low	PCI-VME INT 3 (Universe LINT3#)	3
IRQ9	Level	Low	PCI-PMC1 INTA#, PMC2 INTB#, PCIX INTA#	4
IRQ10	Level	Low	PCI-PMC1 INTB#, PMC2 INTC#, PCIX INTB#	
IRQ11	Level	Low	PCI-PMC1 INTC#, PMC2 INTD#, PCIX INTC#	
IRQ12	Level	Low	PCI-PMC1 INTD#, PMC2 INTA#, PCIX INTD#	
IRQ13	Level	Low	LM/SIG Interrupt 0	4

Table 5-2. RavenMPIC Interrupt Assignments (Continued)

MPIC IRQ	Edge/ Level	Polarity	Interrupt Source	Notes
IRQ14	Level	Low	LM/SIG Interrupt 1	4
IRQ15	N/A	N/A	Not used	

Notes:

1. Interrupt from the PCI/ISA Bridge.
2. Interrupt from the Falcon chipset for a single and/or double bit memory error.
3. The mapping of interrupt sources from the VMEbus and Universe internal interrupt sources is programmable via the Local Interrupt Map 0 Register and the Local Interrupt Map 1 Register in the Universe ASIC.
4. These interrupts also appear at the PIB for backward compatibility with older MVME1600 and PM603/4 modules.

8259 Interrupts

There are 15 interrupt requests supported by the PIB. These 15 interrupts are ISA-type interrupts that are functionally equivalent to two 82C59 interrupt controllers. Except for IRQ0, IRQ1, IRQ2, IRQ8_, and IRQ13, each of the interrupt lines can be configured for either edge-sensitive mode or level-sensitive mode by programming the appropriate ELCR registers in the PIB.

There is also support for four PCI interrupts, PIRQ3_-PIRQ0_. The PIB has four PIRQ Route Control Registers to allow each of the PCI interrupt lines to be routed to any of eleven ISA interrupt lines (IRQ0, IRQ1, IRQ2, IRQ8_, and IRQ13 are reserved for ISA system interrupts). Since PCI interrupts are defined as level-sensitive, software must program the selected IRQ(s) for level-sensitive mode. Note that more than one PCI interrupt can be routed to the same ISA IRQ line. The PIB can be programmed to handle the PCI interrupts if the RavenMPIC is either not present or not used.

The following figure shows the interrupt structure of the PIB.

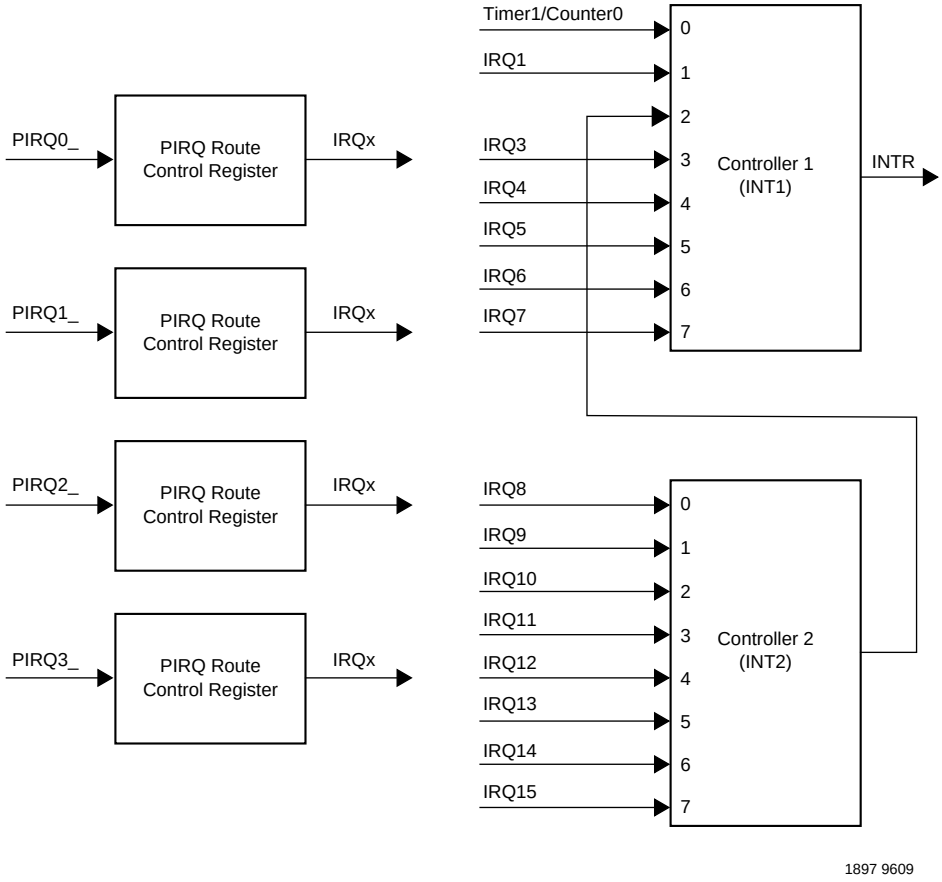

Figure 5-2. PIB Interrupt Handler Block Diagram

The assignments of the PCI and ISA interrupts supported by the PIB are as follows:

Table 5-3. PIB PCI/ISA Interrupt Assignments

PRI	ISA IRQ	PCI IRQ	Controller	Edge/ Level	Polarity	Interrupt Source	Notes
1	IRQ0		INT1	Edge	High	Timer 1 / Counter 0	**1**
2	IRQ1			N/A	N/A	Not used	
3-10	IRQ2			Edge	High	Cascade Interrupt from INT2	
3	IRQ8_		INT2	Edge	Low	ABORT Switch Interrupt	
4	IRQ9			N/A	N/A	Not used	
5	IRQ10	PIRQ0_		Level	Low	PCI-Ethernet Interrupt	**2,3,4**
6	IRQ11	PIRQ1_		Level	Low	Universe Interrupt (LINT0#)	**2,3,4**
7	IRQ12			N/A	N/A	Not used	
8	IRQ13			N/A	N/A	Not used	
9	IRQ14	PIRQ2_		N/A	N/A	Not used	
10	IRQ15	PIRQ3_		Level	Low	PMC/PCIX Interrupt	**2,3,4**
11	IRQ3		INT1	N/A	N/A	Not used	
12	IRQ4			Edge	High	COM1 (16550)	
13	IRQ5			Level	High	LM/SIG Interrupt 0/1	**4**
14	IRQ6			N/A	N/A	Not used	
15	IRQ7			N/A	N/A	Not used	

Notes:

1. Internally generated by the PIB.
2. After a reset, all ISA IRQ interrupt lines default to edge-sensitive mode.
3. These PCI interrupts are routed to the ISA interrupts by programming the PRIQ Route Control Registers in the PIB. The PCI to ISA interrupt assignments in this table are suggested. Each ISA IRQ to which a PCI interrupt is routed to MUST be programmed for level-sensitive mode. Use this routing for PCI interrupts only when the RavenMPIC is either not present or not used.
4. The RavenMPIC, when present, should be used for these interrupts.

ISA DMA Channels

The MVME2300 series does not implement any ISA DMA channels.

Exceptions

Sources of Reset

There are nine potential sources of reset on the MVME2300 series. They are:

1. Power-On Reset
2. RESET Switch
3. Watchdog Timer Reset via the MK48T59 Timekeeper device
4. Port 92 Register via the PIB
5. I/O Reset via the Clock Divisor Register in the PIB
6. VMEbus SYSRESET# signal
7. Local software reset via the Universe ASIC (MISC_CTL Register)
8. VME System Reset Via the Universe ASIC (MISC_CTL Register)
9. VME CSR reset via the Universe ASIC (VCSR_SET Register)

The following table shows which devices are affected by various reset sources:

Table 5-4. Reset Sources and Devices Affected

Device Affected	Processor (s)	Raven ASIC	Falcon Chipset	PCI Devices	ISA Devices	VMEbus (System Controller)
Power-On	✓	✓	✓	✓	✓	✓
Reset Switch	✓	✓	✓	✓	✓	✓
Watchdog (MK48T59)	✓	✓	✓	✓	✓	✓
VME System Reset (SYSRESET# Signal)	✓	✓	✓	✓	✓	✓
VME System Software Reset (MISC_CTL Register)	✓	✓	✓	✓	✓	✓
VME Local Software Reset (MISC_CTL Register)	✓	✓	✓	✓	✓	
VME CSR Reset (VCSR_SET Register)	✓	✓	✓	✓	✓	
Hot Reset (Port 92 Register)	✓	✓	✓	✓	✓	
PCI/ISA Reset (Clock Divisor Register)				✓	✓	

Soft Reset

Software can assert the SRESET# pin of any processor by programming the Processor Init Register of the RavenMPIC appropriately.

Universe Chip Problems after a PCI Reset

Under certain conditions, there can be problems with the Universe chip after a PCI reset. Refer to Chapter 4 for the details.

Error Notification and Handling

The Raven and Falcon chipset can detect certain hardware errors and can be programmed to report these errors via the RavenMPIC interrupts or Machine Check Interrupt. Note that the TEA* signal is not used at all by the MVME2300 series. The following table summarizes how the hardware errors are handled by the MVME2300 series:

Table 5-5. Error Notification and Handling

Cause	Action
Single-bit ECC	*Store*: Write corrected data to memory *Load*: Present corrected data to the MPC master Generate interrupt via RavenMPIC if so enabled
Double-bit ECC	*Store*: Terminate the bus cycle normally without writing to DRAM *Load*: Present un-corrected data to the MPC master Generate interrupt via RavenMPIC if so enabled Generate Machine Check Interrupt to the Processor(s) if so enabled
MPC Bus Time Out	*Store*: Discard write data and terminate bus cycle normally *Load*: Present undefined data to the MPC master Generate interrupt via RavenMPIC if so enabled Generate Machine Check Interrupt to the Processor(s) if so enabled
PCI Target Abort	*Store*: Discard write data and terminate bus cycle normally *Load*: Return all 1's and terminate bus cycle normally Generate interrupt via RavenMPIC if so enabled Generate Machine Check Interrupt to the Processor(s) if so enabled
PCI Master Abort	*Store*: Discard write data and terminate bus cycle normally *Load*: Return all 1's and terminate bus cycle normally Generate interrupt via RavenMPIC if so enabled Generate Machine Check Interrupt to the Processor(s) if so enabled
PERR# Detected	Generate interrupt via RavenMPIC if so enabled Generate Machine Check Interrupt to the Processor(s) if so enabled
SERR# Detected	Generate interrupt via RavenMPIC if so enabled Generate Machine Check Interrupt to the Processor(s) if so enabled

Endian Issues

The MVME2300 series supports both little endian software and big-endian software. Because the PowerPC processor is inherently big endian, PCI is inherently little-endian, and the VMEbus is big endian, things do get rather confusing. The following figures shows how the MVME2300 series handles the endian issue in big-endian and little-endian modes:

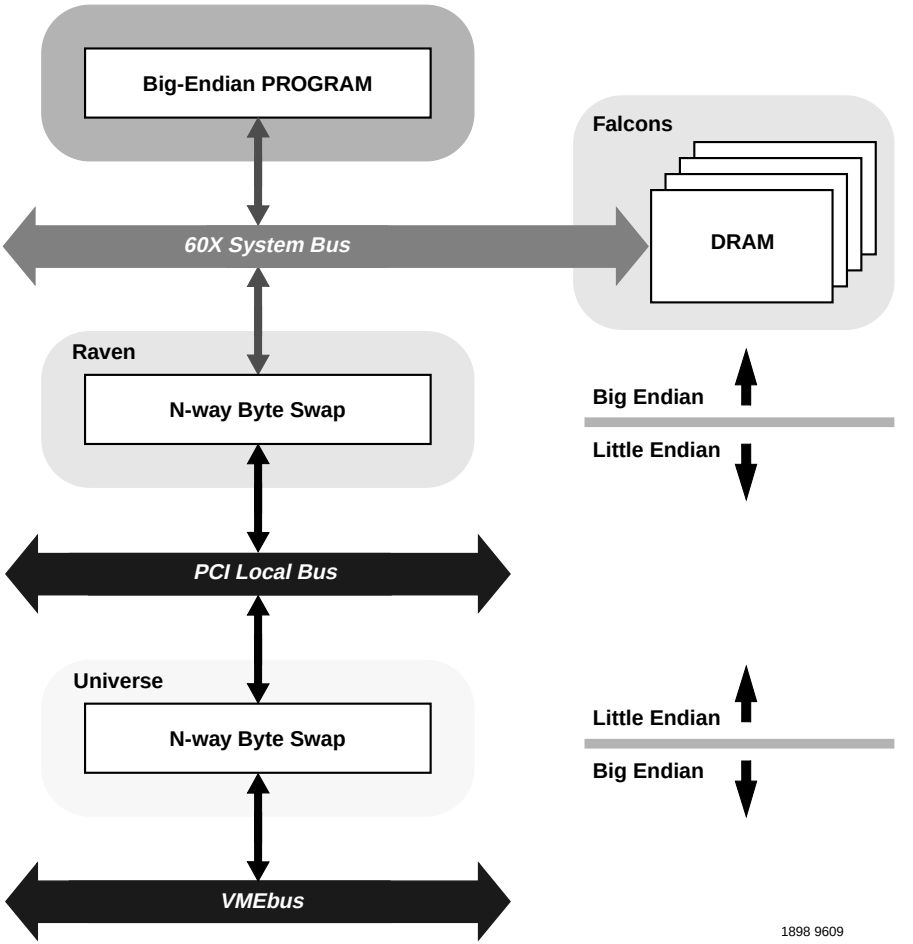

Figure 5-3. Big-Endian Mode

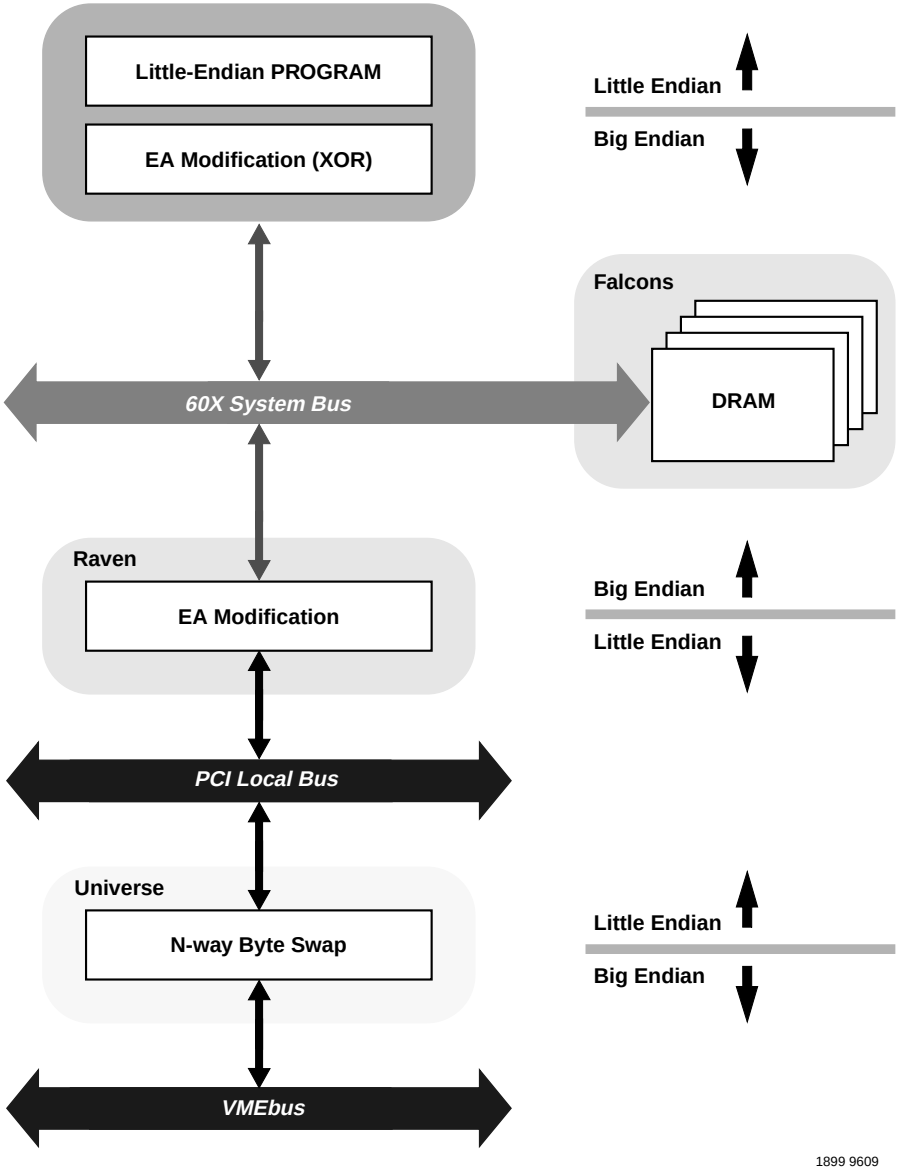

Figure 5-4. Little-Endian Mode

Processor/Memory Domain

The MPC604 processor can operate in both big-endian and little-endian mode. However, it always treats the external processor/memory bus as big-endian by performing *address rearrangement and reordering* when running in little-endian mode.

The MPC registers inside Raven, the registers inside the Falcon chipset, the DRAM, the ROM/FLASH and the system registers always appear as big-endian.

Raven's Involvement

Since PCI is little-endian, the Raven performs byte swapping in both directions (from PCI to memory and from the processor to PCI) to maintain address invariance when it is programmed to operate in big-endian mode with the processor and the memory sub-system.

In little-endian mode, it *reverse-rearranges* the address for PCI-bound accesses and *rearranges* the address for memory-bound accesses (from PCI). In this case, no byte swapping is done.

PCI Domain

The PCI bus is inherently little-endian and all devices connected directly to PCI will operate in little-endian mode, regardless of the mode of operation in the processor's domain.

PCI-SCSI

The MVME2300 series does not implement SCSI.

PCI-Ethernet

Ethernet is byte stream oriented with the byte having the lowest address in memory being the first one to be transferred regardless of the endian mode. Since address invariance is maintained by the Raven in both little-endian and big-endian mode, there should be

no endian issues for the Ethernet data. Big-endian software must still however be aware of the byte-swapping effect when accessing the registers of the PCI-Ethernet device.

PCI-Graphics

The effects of byte swapping on big-endian software must be considered by big-endian software.

Note There are no graphics on the MVME2300 series boards.

Universe's Involvement

Since PCI is little-endian and the VMEbus is big-endian, the Universe performs byte swapping in both directions (from PCI to VMEbus and from VMEbus to PCI) to maintain address invariance, regardless of the mode of operation in the processor's domain.

VMEbus Domain

The VMEbus is inherently big-endian and all devices connected directly to VMEbus are expected to operate in big-endian mode, regardless of the mode of operation in the processor's domain.

In big-endian mode, byte-swapping is performed by the Universe and then by the Raven. The result has the desirable effect by being transparent to the big-endian software.

In little-endian mode, however, software must be aware of the byte-swapping effect from the Universe and the address reverse-rearranging effect of the Raven.

ROM/Flash Initialization

There are two methods used to inject code into the Flash in Bank A: (1) In-circuit programming and (2) Loading it from the ROM/Flash Bank B. For the second method, the hardware must direct the Falcon chipset to map the FFF00000-FFFFFFFF address range to Bank B following a hard reset. Bank A then can be programmed by code from Bank B.

Software can determine the mapping of the FFF00000-FFFFFFFF address range by examining the ***rom_b_rv*** bit in the Falcon's Rom B Base/Size Register.

Table 5-6. ROM/FLASH Bank Default

rom_b_rv	Default Mapping for FFF00000-FFFFFFFF
0	ROM/FLASH Bank A
1	ROM/FLASH Bank B

Ordering Related Documentation

A

Motorola Computer Group Documents

The publications listed below are on related products, and some may be referenced in this document. If not shipped with this product, manuals may be purchased by contacting your local Motorola sales office.

Table A-1. Motorola Computer Group Documents

Document Title	Publication Number
MVME2300-Series VME Processor Module Installation and Use	V2300A/IH
MVME2300-Series VME Processor Module Programmer's Reference Guide (this manual)	V2300A/PG
PPCBug Firmware Package User's Manual (Parts 1 and 2)	PPCBUGA1/UM
	PPCBUGA2/UM
PPCBug Diagnostics Manual	PPCDIAA/UM
PMCspan PMC Adapter Carrier Module Installation and Use	PMCSPANA/IH

Note Although not shown in the above list, each Motorola Computer Group manual publication number is suffixed with characters that represent the revision level of the document, such as "/*xx*2" (the second revision of a manual); a supplement bears the same number as the manual but has a suffix such as "/*xx*2A1" (the first supplement to the second revision of the manual).

Manufacturers' Documents

For additional information, refer to the following table for manufacturers' data sheets or user's manuals. As an additional help, a source for the listed document is also provided. Please note that in many cases, the information is preliminary and the revision levels of the documents are subject to change without notice.

Table A-2. Manufacturers' Documents

Document Title and Source	Publication Number
PowerPC 603TM RISC Microprocessor Technical Summary Literature Distribution Center for Motorola Telephone: 1-800- 441-2447 FAX: (602) 994-6430 or (303) 675-2150 E-mail: ldcformotorola@hibbertco.com	MPC603/D
PowerPC 603TM RISC Microprocessor User's Manual Literature Distribution Center for Motorola Telephone: 1-800- 441-2447 FAX: (602) 994-6430 or (303) 675-2150 E-mail: ldcformotorola@hibbertco.com OR IBM Microelectronics Mail Stop A25/862-1 PowerPC Marketing 1000 River Street Essex Junction, Vermont 05452-4299 Telephone: 1-800-PowerPC Telephone: 1-800-769-3772 FAX: 1-800-POWERfax FAX: 1-800-769-3732	MPC603UM/AD MPR603UMU-01

Table A-2. Manufacturers' Documents (Continued)

Document Title and Source	Publication Number
PowerPC™ Microprocessor Family: The Programming Environments Literature Distribution Center for Motorola Telephone: 1-800- 441-2447 FAX: (602) 994-6430 or (303) 675-2150 E-mail: ldcformotorola@hibbertco.com OR IBM Microelectronics Mail Stop A25/862-1 PowerPC Marketing 1000 River Street Essex Junction, Vermont 05452-4299 Telephone: 1-800-PowerPC Telephone: 1-800-769-3772 FAX: 1-800-POWERfax FAX: 1-800-769-3732	MPCFPE/AD MPRPPCFPE-01
PC16550 UART National Semiconductor Corporation Customer Support Center (or nearest Sales Office) 2900 Semiconductor Drive P.O. Box 58090 Santa Clara, California 95052-8090 Telephone: 1-800-272-9959	PC16550DV
82378 System I/O (SIO) PCI-to-ISA Bridge Controller Intel Corporation Literature Sales P.O. Box 7641 Mt. Prospect, Illinois 60056-7641 Telephone: 1-800-548-4725	290473-003
DECchip 21140 PCI Fast Ethernet LAN Controller Hardware Reference Manual Digital Equipment Corporation Maynard, Massachusetts DECchip Information Line Telephone (United States and Canada): 1-800-332-2717 TTY (United States only): 1-800-332-2515 Telephone (outside North America): +1-508-568-6868	EC-QC0CA-TE

Table A-2. Manufacturers' Documents (Continued)

Document Title and Source	Publication Number
W83C553 Enhanced System I/O Controller with PCI Arbiter (PIB) Winbond Electronics Corporation Winbond Systems Laboratory 2730 Orchard Parkway San Jose, CA 95134 Telephone: (408) 943-6666 FAX:(408) 943-6668	W83C553
M48T59 CMOS 8K x 8 TIMEKEEPER™ SRAM Data Sheet SGS-Thomson Microelectronics Group Marketing Headquarters (or nearest Sales Office) 1000 East Bell Road Phoenix, Arizona 85022 Telephone: (602) 867-6100	M48T59
Universe User Manual Tundra Semiconductor Corporation 603 March Road Kanata, ON K2K 2M5, Canada Telephone: 1-800-267-7231 OR 695 High Glen Drive San Jose, California 95133, USA Telephone: (408) 258-3600 FAX: (408) 258-3659	Universe (Part Number 9000000.MD303.01

Related Specifications

For additional information, refer to the following table for related specifications. As an additional help, a source for the listed document is also provided. Please note that in many cases, the information is preliminary and the revision levels of the documents are subject to change without notice.

Table A-3. Related Specifications

Document Title and Source	Publication Number
VME64 Specification VITA (VMEbus International Trade Association) 7825 E. Gelding Drive, Suite 104 Scottsdale, Arizona 85260-3415 Telephone: (602) 951-8866 FAX: (602) 951-0720	ANSI/VITA 1-1994
NOTE: An earlier version of this specification is available as:	
Versatile Backplane Bus: VMEbus Institute of Electrical and Electronics Engineers, Inc. Publication and Sales Department 345 East 47th Street New York, New York 10017-21633 Telephone: 1-800-678-4333	ANSI/IEEE Standard 1014-1987
OR	
Microprocessor system bus for 1 to 4 byte data Bureau Central de la Commission Electrotechnique Internationale 3, rue de Varembé Geneva, Switzerland	IEC 821 BUS
IEEE - Common Mezzanine Card Specification (CMC) Institute of Electrical and Electronics Engineers, Inc. Publication and Sales Department 345 East 47th Street New York, New York 10017-21633 Telephone: 1-800-678-4333	P1386 Draft 2.0

Table A-3. Related Specifications (Continued)

Document Title and Source	Publication Number
IEEE - PCI Mezzanine Card Specification (PMC) Institute of Electrical and Electronics Engineers, Inc. Publication and Sales Department 345 East 47th Street New York, New York 10017-21633 Telephone: 1-800-678-4333	P1386.1 Draft 2.0
Bidirectional Parallel Port Interface Specification Institute of Electrical and Electronics Engineers, Inc. Publication and Sales Department 345 East 47th Street New York, New York 10017-21633 Telephone: 1-800-678-4333	IEEE Standard 1284
Peripheral Component Interconnect (PCI) Local Bus Specification, Revision 2.0 PCI Special Interest Group P.O. Box 14070 Portland, Oregon 97214-4070 Marketing/Help Line Telephone: (503) 696-6111 Document/Specification Ordering Telephone: 1-800-433-5177or (503) 797-4207 FAX: (503) 234-6762	PCI Local Bus Specification
PowerPC Reference Platform (PRP) Specification, Third Edition, Version 1.0, Volumes I and II International Business Machines Corporation Power Personal Systems Architecture 11400 Burnet Rd. Austin, TX 78758-3493 Document/Specification Ordering Telephone: 1-800-PowerPC Telephone: 1-800-769-3772 Telephone: 708-296-9332	MPR-PPC-RPU-02

Table A-3. Related Specifications (Continued)

Document Title and Source	Publication Number
PowerPC Microprocessor Common Hardware Reference Platform A System Architecture (CHRP), Version 1.0 Literature Distribution Center for Motorola Telephone: 1-800- 441-2447 FAX: (602) 994-6430 or (303) 675-2150 E-mail: ldcformotorola@hibbertco.com OR AFDA, Apple Computer, Inc. P. O. Box 319 Buffalo, NY 14207 Telephone: 1-800-282-2732 FAX: (716) 871-6511 OR IBM 1580 Route 52, Bldg. 504 Hopewell Junction, NY 12533-7531 Telephone: 1-800-PowerPC OR Morgan Kaufmann PUblishers, Inc. 340 Pine street, Sixth Floor San Francisco, CA 94104-3205, USA Telephone: (413) 392-2665 FAX: (415) 982-2665I	
Interface Between Data Terminal Equipment and Data Circuit-Terminating Equipment Employing Serial Binary Data Interchange (EIA-232-D) Electronic Industries Association Engineering Department 2001 Eye Street, N.W. Washington, D.C. 20006	ANSI/EIA-232-D Standard

Glossary

Abbreviations, Acronyms, and Terms to Know

This glossary defines some of the abbreviations, acronyms, and key terms used in this document.

10Base-5 An Ethernet implementation in which the physical medium is a doubly shielded, 50-ohm coaxial cable capable of carrying data at 10 Mbps for a length of 500 meters (also referred to as thicknet). Also known as thick Ethernet.

10Base-2 An Ethernet implementation in which the physical medium is a single-shielded, 50-ohm RG58A/U coaxial cable capable of carrying data at 10 Mbps for a length of 185 meters (also referred to as AUI or thinnet). Also known as thin Ethernet.

10Base-T An Ethernet implementation in which the physical medium is an unshielded twisted pair (UTP) of wires capable of carrying data at 10 Mbps for a maximum distance of 185 meters. Also known as twisted-pair Ethernet.

100Base-TX An Ethernet implementation in which the physical medium is an unshielded twisted pair (UTP) of wires capable of carrying data at 100 Mbps for a maximum distance of 100 meters. Also known as fast Ethernet.

ACIA **A**synchronous **C**ommunications **I**nterface **A**dapter

AIX **A**dvanced **I**nteractive e**X**ecutive (IBM version of UNIX)

architecture The main overall design in which each individual hardware component of the computer system is interrelated. The most common uses of this term are 8-bit, 16-bit, or 32-bit architectural design systems.

ASCII **A**merican **S**tandard **C**ode for **I**nformation **I**nterchange. This is a 7-bit code used to encode alphanumeric information. In the IBM-compatible world, this is expanded to 8-bits to encode a total of 256 alphanumeric and control characters.

ASIC **A**pplication-**S**pecific **I**ntegrated **C**ircuit

AUI **A**ttachment **U**nit **I**nterface

BBRAM Battery Backed-up Random Access Memory

bi-endian Having big-endian and little-endian byte ordering capability.

big-endian A byte-ordering method in memory where the address *n* of a word corresponds to the most significant byte. In an addressed memory word, the bytes are ordered (left to right) 0, 1, 2, 3, with 0 being the most significant byte.

BIOS **B**asic **I**nput/**O**utput **S**ystem. This is the built-in program that controls the basic functions of communications between the processor and the I/O (peripherals) devices. Also referred to as ROM BIOS.

BitBLT **Bit** Boundary **BL**ock **T**ransfer. A type of graphics drawing routine that moves a rectangle of data from one area of display memory to another. The data specifically need not have any particular alignment.

BLT **BL**ock **T**ransfer

board The term more commonly used to refer to a PCB (printed circuit board). Basically, a flat board made of nonconducting material, such as plastic or fiberglass, on which chips and other electronic components are mounted. Also referred to as a circuit board or card.

bpi **b**its **p**er **i**nch

bps **b**its **p**er **s**econd

bus The pathway used to communicate between the CPU, memory, and various input/output devices, including floppy and hard disk drives. Available in various widths (8-, 16-, and 32-bit), with accompanying increases in speed.

cache A high-speed memory that resides logically between a central processing unit (CPU) and the main memory. This temporary memory holds the data and/or

instructions that the CPU is most likely to use over and over again and avoids accessing the slower hard or floppy disk drive.

CAS **C**olumn **A**ddress **S**trobe. The clock signal used in dynamic RAMs to control the input of column addresses.

CD **C**ompact **D**isc. A hard, round, flat portable storage unit that stores information digitally.

CD-ROM **C**ompact **D**isk **R**ead-**O**nly **M**emory

CFM **C**ubic **F**eet per **M**inute

CHRP See Common Hardware Reference Platform (CHRP).

CHRP-compliant See Common Hardware Reference Platform (CHRP).

CHRP Spec See Common Hardware Reference Platform (CHRP).

CISC **C**omplex-**I**nstruction-**S**et **C**omputer. A computer whose processor is designed to sequentially run variable-length instructions, many of which require several clock cycles, that perform complex tasks and thereby simplify programming.

CODEC **CO**der/**DEC**oder

Color Difference (CD) The signals of (R-Y) and (B-Y) without the luminance (-Y) signal. The Green signals (G-Y) can be extracted by these two signals.

Common Hardware Reference Platform (CHRP)
A specification published by the Apple, IBM, and Motorola which defines the devices, interfaces, and data formats that make up a CHRP-compliant system using a PowerPC processor.

Composite Video Signal (CVS/CVBS)
Signal that carries video picture information for color, brightness and synchronizing signals for both horizontal and vertical scans. Sometimes referred to as “Baseband Video”.

cpi **c**haracters **p**er **i**nch

cpl **c**haracters **p**er **l**ine

CPU	**C**entral **P**rocessing **U**nit. The master computer unit in a system.
DCE	**D**ata **C**ircuit-terminating **E**quipment.
DLL	**D**ynamic **L**ink **L**ibrary. A set of functions that are linked to the referencing program at the time it is loaded into memory.
DMA	**D**irect **M**emory **A**ccess. A method by which a device may read or write to memory directly without processor intervention. DMA is typically used by block I/O devices.
DOS	**D**isk **O**perating **S**ystem
dpi	**d**ots **p**er **i**nch
DRAM	**D**ynamic **R**andom **A**ccess **M**emory. A memory technology that is characterized by extreme high density, low power, and low cost. It must be more or less continuously refreshed to avoid loss of data.
DTE	**D**ata **T**erminal **E**quipment.
ECC	**E**rror **C**orrection **C**ode
ECP	**E**xtended **C**apability **P**ort
EEPROM	**E**lectrically **E**rasable **P**rogrammable **R**ead-**O**nly **M**emory. A memory storage device that can be written repeatedly with no special erasure fixture. EEPROMs do not lose their contents when they are powered down.
EISA (bus)	**E**xtended **I**ndustry **S**tandard **A**rchitecture (bus) (IBM). An architectural system using a 32-bit bus that allows data to be transferred between peripherals in 32-bit chunks instead of 16-bit or 8-bit that most systems use. With the transfer of larger bits of information, the machine is able to perform much faster than the standard ISA bus system.
EPP	**E**nhanced **P**arallel **P**ort
EPROM	**E**rasable **P**rogrammable **R**ead-**O**nly **M**emory. A memory storage device that can be written once (per erasure cycle) and read many times.
ESCC	**E**nhanced **S**erial **C**ommunication **C**ontroller
ESD	**E**lectro-**S**tatic **D**ischarge/Damage

Ethernet A local area network standard that uses radio frequency signals carried by coaxial cables.

Falcon The DRAM controller chip developed by Motorola for the MVME2600 and MVME3600 series of boards. It is intended to be used in sets of two to provide the necessary interface between the Power PC60*x* bus and the 144-bit ECC DRAM (system memory array) and/or ROM/Flash.

fast Ethernet See 100Base-TX.

FDC **F**loppy **D**isk **C**ontroller

FDDI **F**iber **D**istributed **D**ata **I**nterface. A network based on the use of optical-fiber cable to transmit data in non-return-to-zero, invert-on-1s (NRZI) format at speeds up to 100 Mbps.

FIFO **F**irst-**I**n, **F**irst-**O**ut. A memory that can temporarily hold data so that the sending device can send data faster than the receiving device can accept it. The sending and receiving devices typically operate asynchronously.

firmware The program or specific software instructions that have been more or less permanently burned into an electronic component, such as a ROM (read-only memory) or an EPROM (erasable programmable read-only memory).

frame One complete television picture frame consists of 525 horizontal lines with the NTSC system. One frame consists of two Fields.

graphics controller On EGA and VGA, a section of circuitry that can provide hardware assist for graphics drawing algorithms by performing logical functions on data written to display memory.

HAL **H**ardware **A**bstraction **L**ayer. The lower level hardware interface module of the Windows NT operating system. It contains platform specific functionality.

hardware A computing system is normally spoken of as having two major components: hardware and software. Hardware is the term used to describe any of the physical embodiments

of a computer system, with emphasis on the electronic circuits (the computer) and electromechanical devices (peripherals) that make up the system.

HCT **H**ardware **C**onformance **T**est. A test used to ensure that both hardware and software conform to the Windows NT interface.

I/O **I**nput/**O**utput

IBC PCI/**I**SA **B**ridge **C**ontroller

IDC **I**nsulation **D**isplacement **C**onnector

IDE **I**ntelligent **D**evice **E**xpansion

IEEE **I**nstitute of **E**lectrical and **E**lectronics **E**ngineers

interlaced A graphics system in which the even scanlines are refreshed in one vertical cycle (field), and the odd scanlines are refreshed in another vertical cycle. The advantage is that the video bandwidth is roughly half that required for a non-interlaced system of the same resolution. This results in less costly hardware. It also may make it possible to display a resolution that would otherwise be impossible on given hardware. The disadvantage of an interlaced system is flicker, especially when displaying objects that are only a few scanlines high.

IQ Signals Similar to the color difference signals (R-Y), (B-Y) but using different vector axis for encoding or decoding. Used by some USA TV and IC manufacturers for color decoding.

ISA (bus) **I**ndustry **S**tandard **A**rchitecture (bus). The de facto standard system bus for IBM-compatible computers until the introduction of VESA and PCI. Used in the reference platform specification. (IBM)

ISASIO **ISA** **S**uper **I**nput/**O**utput device

ISDN **I**ntegrated **S**ervices **D**igital **N**etwork. A standard for digitally transmitting video, audio, and electronic data over public phone networks.

LAN **L**ocal **A**rea **N**etwork

LED **L**ight-**E**mitting **D**iode

LFM — **L**inear **F**eet per **M**inute

little-endian — A byte-ordering method in memory where the address *n* of a word corresponds to the least significant byte. In an addressed memory word, the bytes are ordered (left to right) 3, 2, 1, 0, with 3 being the most significant byte.

MBLT — **M**ultiplexed **BL**ock **T**ransfer

MCA (bus) — **M**icro **C**hannel **A**rchitecture

MCG — **M**otorola **C**omputer **G**roup

MFM — **M**odified **F**requency **M**odulation

MIDI — **M**usical **I**nstrument **D**igital **I**nterface. The standard format for recording, storing, and playing digital music.

MPC — **M**ultimedia **P**ersonal **C**omputer

MPC105 — The PowerPC-to-PCI bus bridge chip developed by Motorola for the Ultra 603/Ultra 604 system board. It provides the necessary interface between the MPC603/MPC604 processor and the Boot ROM (secondary cache), the DRAM (system memory array), and the PCI bus.

MPC601 — Motorola's component designation for the PowerPC 601 microprocessor.

MPC603 — Motorola's component designation for the PowerPC 603 microprocessor.

MPC604 — Motorola's component designation for the PowerPC 604 microprocessor.

MPIC — **M**ulti-**P**rocessor **I**nterrupt **C**ontroller

MPU — **M**icro**P**rocessing **U**nit

MTBF — **M**ean **T**ime **B**etween **F**ailures. A statistical term relating to reliability as expressed in power on hours (poh). It was originally developed for the military and can be calculated several different ways, yielding substantially different results. The specification is based on a large number of samplings in one place, running continuously, and the rate at which failure occurs. MTBF is not representative of how

long a device, or any individual device is likely to last, nor is it a warranty, but rather, of the relative reliability of a family of products.

multisession The ability to record additional information, such as digitized photographs, on a CD-ROM after a prior recording session has ended.

non-interlaced A video system in which every pixel is refreshed during every vertical scan. A non-interlaced system is normally more expensive than an interlaced system of the same resolution, and is usually said to have a more pleasing appearance.

nonvolatile memory A memory in which the data content is maintained whether the power supply is connected or not.

NTSC **N**ational **T**elevision **S**tandards **C**ommittee (USA)

NVRAM **N**on-**V**olatile **R**andom **A**ccess **M**emory

OEM **O**riginal **E**quipment **M**anufacturer

OMPAC **O**ver - **M**olded **P**ad **A**rray **C**arrier

OS **O**perating **S**ystem. The software that manages the computer resources, accesses files, and dispatches programs.

OTP **O**ne-**T**ime **P**rogrammable

palette The range of colors available on the screen, not necessarily simultaneously. For VGA, this is either 16 or 256 simultaneous colors out of 262,144.

parallel port A connector that can exchange data with an I/O device eight bits at a time. This port is more commonly used for the connection of a printer to a system.

PCI (local bus) **P**eripheral **C**omponent **I**nterconnect (local bus) (Intel). A high-performance, 32-bit internal interconnect bus used for data transfer to peripheral controller components, such as those for audio, video, and graphics.

PCMCIA (bus) **P**ersonal **C**omputer **M**emory **C**ard **I**nternational **A**ssociation (bus). A standard external interconnect bus which allows peripherals adhering to the standard to be plugged in and used without further system modification.

PCR **P**CI **C**onfiguration **R**egister

PHB **P**CI **H**ost **B**ridge

PDS **P**rocessor **D**irect **S**lot

physical address A binary address that refers to the actual location of information stored in secondary storage.

PIB **P**CI-to-**I**SA **B**ridge

pixel An acronym for picture element, and is also called a pel. A pixel is the smallest addressable graphic on a display screen. In RGB systems, the color of a pixel is defined by some Red intensity, some Green intensity, and some Blue intensity.

PLL **P**hase-**L**ocked **L**oop

PMC **P**CI **M**ezzanine **C**ard

POWER **P**erformance **O**ptimized **W**ith **E**nhanced **R**ISC architecture (IBM)

PowerPC™ The trademark used to describe the **P**erformance **O**ptimized **W**ith **E**nhanced **R**ISC microprocessor architecture for **P**ersonal **C**omputers developed by the IBM Corporation. PowerPC is superscalar, which means it can handle more than one instruction per clock cycle. Instructions can be sent simultaneously to three types of independent execution units (branch units, fixed-point units, and floating-point units), where they can execute concurrently, but finish out of order. PowerPC is used by Motorola, Inc. under license from IBM.

PowerPC 601™ The first implementation of the PowerPC family of microprocessors. This CPU incorporates a memory management unit with a 256-entry buffer and a 32KB unified (instruction and data) cache. It provides a 64-bit data bus and a separate 32-bit address bus. PowerPC 601 is used by Motorola, Inc. under license from IBM.

PowerPC 603™ The second implementation of the PowerPC family of microprocessors. This CPU incorporates a memory management unit with a 64-entry buffer and an 8KB (instruction and data) cache. It provides a selectable 32-bit or 64-bit data bus and a separate 32-bit address bus. PowerPC 603 is used by Motorola, Inc. under license from IBM.

PowerPC 604™ The third implementation of the PowerPC family of microprocessors. PowerPC 604 is used by Motorola, Inc. under license from IBM.

PowerPC Reference Platform (PRP)
A specification published by the IBM Power Personal Systems Division which defines the devices, interfaces, and data formats that make up a PRP-compliant system using a PowerPC processor.

PowerStack™ RISC PC (System Board)
A PowerPC-based computer board platform developed by the Motorola Computer Group. It supports Microsoft's Windows NT and IBM's AIX operating systems.

PRP See PowerPC Reference Platform (PRP).

PRP-compliant See PowerPC Reference Platform (PRP).

PRP Spec See PowerPC Reference Platform (PRP).

PROM **P**rogrammable **R**ead-**O**nly **M**emory

PS/2 **P**ersonal **S**ystem/**2** (IBM)

QFP **Q**uad **F**lat **P**ackage

RAM **R**andom-**A**ccess **M**emory. The temporary memory that a computer uses to hold the instructions and data currently being worked with. All data in RAM is lost when the computer is turned off.

RAS **R**ow **A**ddress **S**trobe. A clock signal used in dynamic RAMs to control the input of the row addresses.

Raven The PowerPC-to-PCI local bus bridge chip developed by Motorola for the MVME2600 and MVME3600 series of boards. It provides the necessary interface between the PowerPC 60x bus and the PCI bus, and acts as interrupt controller.

Reduced-Instruction-Set Computer (RISC) A computer in which the processor's instruction set is limited to constant-length instructions that can usually be executed in a single clock cycle.

RFI **R**adio **F**requency **I**nterference

RGB The three separate color signals: **R**ed, **G**reen, and **B**lue. Used with color displays, an interface that uses these three color signals as opposed to an interface used with a monochrome display that requires only a single signal. Both digital and analog RGB interfaces exist.

RISC See Reduced Instruction Set Computer (RISC).

ROM **R**ead-**O**nly **M**emory

RTC **R**eal-**T**ime **C**lock

SBC **S**ingle **B**oard **C**omputer

SCSI **S**mall **C**omputer **S**ystems **I**nterface. An industry-standard high-speed interface primarily used for secondary storage. SCSI-1 provides up to 5 Mbps data transfer.

SCSI-2 (Fast/Wide) An improvement over plain SCSI; and includes command queuing. Fast SCSI provides 10 Mbps data transfer on an 8-bit bus. Wide SCSI provides up to 40 Mbps data transfer on a 16- or 32-bit bus.

serial port A connector that can exchange data with an I/O device one bit at a time. It may operate synchronously or asynchronously, and may include start bits, stop bits, and/or parity.

SIM **S**erial **I**nterface **M**odule

SIMM **S**ingle **I**nline **M**emory **M**odule. A small circuit board with RAM chips (normally surface mounted) on it designed to fit into a standard slot.

SIO	**S**uper **I/O** controller
SMP	**S**ymmetric **M**ulti**P**rocessing. A computer architecture in which tasks are distributed among two or more local processors.
SMT	**S**urface **M**ount **T**echnology. A method of mounting devices (such as integrated circuits, resistors, capacitors, and others) on a printed circuit board, characterized by not requiring mounting holes. Rather, the devices are soldered to pads on the printed circuit board. Surface-mount devices are typically smaller than the equivalent through-hole devices.
software	A computing system is normally spoken of as having two major components: hardware and software. Software is the term used to describe any single program or group of programs, languages, operating procedures, and documentation of a computer system. Software is the real interface between the user and the computer.
SRAM	**S**tatic **R**andom **A**ccess **M**emory
SSBLT	**S**ource **S**ynchronous **BL**ock **T**ransfer
standard(s)	A set of detailed technical guidelines used as a means of establishing uniformity in an area of hardware or software development.
SVGA	**S**uper **V**ideo **G**raphics **A**rray (IBM). An improved VGA monitor standard that provides at least 256 simultaneous colors and a screen resolution of 800 x 600 pixels.
Teletext	One way broadcast of digital information. The digital information is injected in the broadcast TV signal, VBI, or full field, The transmission medium could be satellite, microwave, cable, etc. The display medium is a regular TV receiver.
thick Ethernet	See 10Base-5.
thin Ethernet	See 10Base-2.
twisted-pair Ethernet	See 10Base-T.
UART	**U**niversal **A**synchronous **R**eceiver/**T**ransmitter

Universe ASIC developed by Tundra in consultation with Motorola, that provides the complete interface between the PCI bus and the 64-bit VMEbus.

UV **U**ltra**V**iolet

UVGA **U**ltra **V**ideo **G**raphics **A**rray. An improved VGA monitor standard that provides at least 256 simultaneous colors and a screen resolution of 1024 x 768 pixels.

Vertical Blanking Interval (VBI) The time it takes the beam to fly back to the top of the screen in order to retrace the opposite field (odd or even). VBI is in the order of 20 TV lines. Teletext information is transmitted over 4 of these lines (lines 14-17).

VESA (bus) **V**ideo **E**lectronics **S**tandards **A**ssociation (or VL bus). An internal interconnect standard for transferring video information to a computer display system.

VGA **V**ideo **G**raphics **A**rray (IBM). The third and most common monitor standard used today. It provides up to 256 simultaneous colors and a screen resolution of 640 x 480 pixels.

virtual address A binary address issued by a CPU that indirectly refers to the location of information in primary memory, such as main memory. When data is copied from disk to main memory, the physical address is changed to the virtual address.

VL bus See **V**ESA **L**ocal bus (VL bus).

VMEchip2 MCG second generation VMEbus interface ASIC (Motorola)

VME2PCI MCG ASIC that interfaces between the PCI bus and the VMEchip2 device.

volatile memory A memory in which the data content is lost when the power supply is disconnected.

VRAM **V**ideo (Dynamic) **R**andom **A**ccess **M**emory. Memory chips with two ports, one used for random accesses and the other capable of serial accesses. Once the serial port has been initialized (with a transfer cycle), it can operate independently of the random port. This frees the random

port for CPU accesses. The result of adding the serial port is a significantly reduced amount of interference from screen refresh. VRAMs cost more per bit than DRAMs.

Windows NT™ The trademark representing **Windows N**ew **T**echnology, a computer operating system developed by the Microsoft Corporation.

XGA E**X**tended **G**raphics **A**rray. An improved IBM VGA monitor standard that provides at least 256 simultaneous colors and a screen resolution of 1024 x 768 pixels.

Y Signal Luminance. This determines the brightness of each spot (pixel) on a CRT screen either color or B/W systems, but not the color.

Index

Numerics

16550 access registers 1-34
16550 UART 1-34
32-Bit Counter 3-53
8259 compatibility 2-67
8259 interrupts 5-4
8259 mode 2-96

A

A0-A31 3-5
abbreviations, acronyms, and terms to know GL-1
access timing (DRAM) 3-8, 3-9, 3-10
access timing (ROM) 3-11
address modification for little endian transfers 2-27
address pipelining 3-6
address transfers 3-12
address/data stepping 2-21
addressing 2-15, 2-19
Application-Specific Integrated Circuit (ASIC) 1-1
arbitration 2-20
arbitration latency 2-20
architectural diagram for the Universe 4-3
architectural notes 2-97
architectural overview 2-4, 4-2
architecture 2-65
ARTRY_ 3-12
assertion, definition 1-2
asterisk (*) 1-2

B

Base Module Feature Register 1-38
Base Module Status Register (BMSR) 1-39
big to little endian data swap 2-26
big-endian 1-2
big-endian mode 5-12
binary number 1-1
bit descriptions 3-32
bit ordering convention 3-1
block diagram 2-3
block diagram description 2-70
block diagrams 3-2
Block_A/B/C/D Configurations 3-36
blocks A and/or B present, blocks C and D not present 3-20
blocks A and/or B present, blocks C and/or D present 3-21
bus interface (60x) 3-12
byte ordering 1-2
byte, definition 1-2

C

cache coherency 3-12
cache coherency restrictions 3-13
cache support 2-17, 2-21
CAS* 3-20
CHRP memory map example 1-10
CLK FREQUENCY 3-37
CLK Frequency Register 3-37
clock frequency 3-37
Column Address 3-47
combining, merging, and collapsing 2-19
command types 2-15, 2-18

CONFIG_ADDRESS Register 2-60
CONFIG_DATA Register 2-63
configuration registers 2-11
control bit descriptions 3-32
control bit, definition 1-2
conventions, manual 1-1
CPU Configuration Register 1-37
CPU Control Register 1-33
CSR accesses 3-23
CSR architecture 3-24
CSR base address 3-24
CSR reads and writes 3-24
CSR's readability 2-66
current task priority level 2-96
cycle types 3-13

D

data path diagram 3-64
data path for reads from the Falcon internal CSRs 3-24
data path for writes to the Falcon internal CSRs 3-25
data path mapping 3-65
data paths 3-63
data transfers 3-12
decimal number 1-1
default PCI memory map 1-14
default processor memory map 1-9
defaults 3-22
derc 3-40
device selection 2-16
Disable Error Correction control bit 3-40
DMA controller 4-7
documentation, related A-1
double word, definition 1-2
DRAM addressing 3-60
DRAM arbitration 3-22
DRAM Attributes Register 3-35
DRAM Base Register 3-37
DRAM connection diagram 3-5
DRAM enable bits 3-35
DRAM size control bits 3-36
DRAM speed control bits 3-34
DRAM speeds 3-7
DRAM tester 3-15
DRAM Tester Control Registers 3-53
DRAM tester control registers 3-53
dynamically changing I/O interrupt configuration 2-95

E

ECC 3-13
ECC codes 3-61
ECC Control Register 3-38
elog 3-43
embt 3-43
emulated Z8536 access registers 1-46
emulated Z8536 CIO registers and port pins 1-46
emulated Z8536 registers 1-46
endian conversion 2-25
endian issues 5-11
End-of-Interrupt Registers 2-92
EOI Register 2-96
Error Address Register 3-45
error correction 3-13
Error Correction Codes 3-61
error detection 3-13
error handling 2-28
Error Logger Register 3-42
error logging 3-15
error notification and handling 5-10
error reporting 3-14
ERROR_ADDRESS 3-45
ERROR_SYNDROME 3-44
esbt 3-43
escb 3-43
esen 3-43
example 1 4-16
example 2 4-17
example 3 4-19
examples 4-16
exceptions 5-8

exclusive access 2-16, 2-20
external interrupt service 2-93
External Register Set 3-56
external register set 3-23
external register set reads and writes 3-24
External Source Destination Registers 2-88
External Source Vector/Priority Registers 2-87

F

Falcon ECC Memory Controller chip set 3-1
Falcon internal data paths (simplified) 3-4
Falcon pair used with DRAM in a system 3-3
Falcon-controlled system registers 1-27
false, definition 1-3
fast back-to-back transactions 2-16, 2-20
fast refresh control bit 3-34
Feature Reporting Register 2-79
features 2-1, 3-1
Flash (see ROM/Flash) 3-16
four-beat reads/writes 3-6
functional description 1-7, 2-4, 3-6, 4-2

G

General Control Register 3-33
General Control-Status/Feature Registers 2-34
general information 4-1
General Purpose Registers 2-51
general-purpose software-readable header 1-35
general-purpose software-readable header (J17) 1-35
generating PCI configuration cycles 2-23
generating PCI cycles 2-21
generating PCI interrupt acknowledge cycles 2-25
generating PCI memory and I/O cycles 2-21
generating PCI special cycles 2-25
Global Configuration Register 2-80
glossary GL-1

H

half-word, definition 1-2
headers
J17 1-35
hexadecimal character 1-1

I

I/O Base Register 2-56
In-Service Register (ISR) 2-72
Interprocessor Interrupt Dispatch Registers 2-90
interprocessor interrupts 2-95
interprocessor interrupts (IPI) 2-67
Interrupt Acknowledge Register 2-96
Interrupt Acknowledge Registers 2-92
interrupt delivery modes 2-69
Interrupt Enable control bits 3-41
interrupt handling 5-2
Interrupt Pending Register (IPR) 2-71
Interrupt Request Register (IRR) 2-72
interrupt router 2-72
interrupt selector (IS) 2-71
interrupt source priority 2-66
Interrupt Task Priority Registers 2-91
interrupter 4-6
interrupter and interrupt handler 4-6
introduction 2-1, 2-65, 3-1, 4-1, 5-1
IPI Vector/Priority Registers 2-82
ISA DMA channels 1-47, 5-7
ISA local resource bus 1-34

J

jumpers, software readable 1-35

L

L2 cache support 3-13

L2CLM_ 3-13
Large Scale Integration (LSI) 1-1
latency 2-16
little-endian mode 5-13
LM/SIG Control Register 1-41
LM/SIG Status Register 1-42
Location Monitor Lower Base Address Register 1-44
Location Monitor Upper Base Address Register 1-43

M

manual terminology 1-2
manufacturers' documents A-2
master initiated termination 2-20
mcken 3-41
Memory Base Register 2-57
Memory Configuration Register (MEMCR) 1-30
memory map for 4-byte reads to the CSR 3-28
memory map for 4-byte writes to the internal register set and test SRAM 3-28
memory map for byte reads to the CSRs 3-26
memory map for byte writes to the internal register set and test SRAM 3-27
memory maps 1-8
mien 3-41
MK48T59/559 access registers 1-36
module configuration and status registers 1-36
Motorola Computer Group documents A-1
MPC address mapping 2-4
MPC arbiter 2-10
MPC Arbiter Control Register 2-37
MPC bus address space 2-11
MPC bus interface 2-4
MPC bus timer 2-10
MPC Error Address Register 2-42
MPC Error Attribute Register - MERAT 2-43
MPC Error Enable Register 2-38
MPC Error Status Register 2-40
MPC master 2-8
MPC registers 2-31
MPC slave 2-6
MPC Slave Address (0,1 and 2) Registers 2-47
MPC Slave Address (3) Register 2-48
MPC Slave Offset/Attribute (0,1 and 2) Registers 2-49
MPC Slave Offset/Attribute (3) Registers 2-50
MPC slave response command types 2-7
MPC to PCI address decoding 2-5
MPC to PCI address translation 2-6
MPC transfer types 2-9
MPC write posting 2-8
MPIC registers 2-74
MVME2300 series 1-1
MVME2300 series system block diagram 1-6
MVME230x features 1-3
MVME2600 series interrupt architecture 5-2

N

negation, definition 1-2
nesting of interrupt events 2-66
NVRAM/RTC & Watchdog Timer Registers 1-36

O

OE* 3-20
operation 2-95
overall DRAM connections 3-5
overview 1-3, 2-1, 3-1

P

parity 2-17, 2-21
parity checking 3-57
PCI 2-17
PCI address mapping 2-11
PCI arbitration 5-1
PCI arbitration assignments 5-1
PCI bus interface 4-5
PCI CHRP memory map 1-14
PCI Command/ Status Registers 2-53
PCI configuration access 1-13
PCI domain 5-14
PCI interface 2-10
PCI Interrupt Acknowledge Register 2-45
PCI master 2-17
PCI master command codes 2-19
PCI memory maps 1-14
PCI PREP memory map 1-18
PCI registers 2-51
PCI slave 2-14
PCI Slave Address (0,1,2 and 3) Registers 2-58
PCI Slave Attribute/ Offset (0,1,2 and 3) Registers 2-59
PCI slave response command types 2-15
PCI spread I/O address translation 2-22
PCI to MPC address decoding 2-12
PCI to MPC address translation 2-13
PCI write posting 2-17
PCI-Ethernet 5-14
PCI-graphics 5-15
PCI-SCSI 5-14
performance 3-6
PIB interrupt handler block diagram 5-5
PIB PCI/ISA interrupt assignments 5-6
PowerPC 60x Address to DRAM Address Mappings 3-60
PowerPC 60x address to ROM/Flash address mapping with 2, 32-bit or 1, 64-bit 3-19
PowerPC 60x bus to DRAM access timing using 50ns hyper devices 3-10
PowerPC 60x bus to DRAM access timing using 60ns page devices 3-9
PowerPC 60x bus to ROM/Flash access timing using 32/64-bit devices 3-11
PowerPC 60x bus to ROM/Flash access timing using 8-bit devices 3-11
PowerPC 60x to ROM/Flash address mapping when ROM/Flash is 16 bits wide (8 bits per Falcon) 3-18
PowerPC 60x to ROM/Flash address mapping with 2, 8-bit devices 3-18
PowerPC bus to DRAM access timing 3-8
PowerPC data to DRAM data mapping 3-65
PowerPC to DRAM data correspondence 3-64
Power-Up Reset status bit 3-38
Power-Up Reset Status Registers 3-55
PR_STAT1 3-55
PR_STAT2 3-55
PREP memory map example 1-12
Prescaler Adjust Register 2-37
problem description 4-14
processor CHRP memory map 1-10
Processor Init Register 2-81
processor memory maps 1-8
processor PREP memory map 1-12
processor/memory domain 5-14
processor's current task priority 2-66
product overview - features 4-1
program visible registers 2-71
programming details 5-1
programming model 1-8, 3-24
programming notes 2-93
programming ROM/Flash 3-57

R

RAM A BASE 3-37
RAM B BASE 3-37
RAM C BASE 3-37
RAM D BASE 3-37
RAS* 3-20
Raven block diagram 2-3
Raven interrupt controller (RavenMPIC) features 2-65
Raven interrupt controller implementation 2-65
Raven MPC register map 2-31
Raven MPC register values for CHRP memory map 1-11
Raven MPC register values for PREP memory map 1-13
Raven PCI configuration register map 2-52
Raven PCI Host Bridge & Multi-Processor Interrupt Controller chip 2-1
Raven PCI I/O register map 2-52
Raven PCI register values for CHRP memory map 1-16
Raven PCI register values for PREP memory map 1-19
Raven registers 2-27
Raven's involvement 5-14
Raven-detected errors 2-68
Raven-Detected Errors Destination Register 2-90
Raven-Detected Errors Vector/Priority Register 2-89
RavenMPIC 5-3
RavenMPIC block diagram 2-70
RavenMPIC control registers 2-14
RavenMPIC interrupt assignments 5-3
RavenMPIC register map 2-75
RavenMPIC registers 2-74
Read/Write Checkbits control bit 3-38
Read/Write to ROM/Flash 3-50
readable jumpers 1-35
Refresh Counter Test control bits 3-46
refresh/scrub 3-20
Refresh/Scrub Address Register 3-46
register bit descriptions 3-32
register summary 3-29, 3-30
registers 2-31
registers - Universe Control and Status Registers (UCSR) 4-8
related documentation, ordering A-1
related specifications A-5
reset sources and devices affected 5-9
reset state 2-94
Revision ID 3-33
Revision ID Register 2-33
Revision ID/ Class Code Registers 2-55
Revision ID/General Control Register 3-33
ROM 5-16
ROM Block A Size Encodings 3-48
ROM Block B Size Encoding 3-52
ROM/Flash 3-16
ROM/Flash A Base Address control bits 3-47
ROM/Flash A Base/Size Register 3-47
ROM/Flash A size encoding 3-48
ROM/Flash A Width control bit 3-48
ROM/Flash B Base Address control bits 3-50
ROM/Flash B Base/Size Register 3-50
ROM/Flash B Width control bit 3-51
ROM/FLASH bank default 5-16
ROM/Flash initialization 5-16
ROM/Flash interface 3-16
ROM/Flash speed 3-11
rom_a_64 3-48
ROM_A_BASE 3-47
rom_a_en 3-49
rom_a_rv 3-49
rom_a_rv and rom_b_rv encoding 3-49
rom_a_siz 3-48
rom_a_we 3-49
rom_b_64 3-51

INDEX

ROM_B_BASE 3-50
rom_b_en 3-52
rom_b_rv 3-52
rom_b_siz 3-52
rom_b_we 3-52
Row Address 3-46
rtest encodings 3-46
rtest0-rtest2 3-46
rwcb 3-38

S

SBE_COUNT 3-44
scb0,scb1 3-45
scien 3-38, 3-41
scof 3-44
scrub counter 3-45
Scrub Write Enable control bit 3-46
Scrub/Refresh Register 3-45
Semaphore Register 1 1-44
Semaphore Register 2 1-45
Seven-Segment Display Register 1-40
sien 3-41
Single Bit Error Counter 3-44
single word, definition 1-2
single-beat reads/writes 3-7
single-beat writes 3-7
single-bit error 3-14
single-bit errors ordered by syndrome code 3-62
sizing addresses 3-59
sizing DRAM 3-58
small-endian 1-2
soft reset 5-9
software considerations 3-57
software readable jumpers 1-35
sources of reset 5-8
specifications
related A-5
spurious vector generation 2-67
Spurious Vector Register 2-83
SRAM base address 3-24
SRAM reads and writes 3-24
status bit descriptions 3-32
status bit, definition 1-2
swen 3-46
SWREN 3-21
syndrome codes ordered by bit in error 3-61
System Configuration Register (SYSCR) 1-28
System External Cache Control Register (SXCCR) 1-32
system register summary 1-27

T

target initiated termination
2-16
Test SRAM 3-54
tester control registers 3-53
tester description 3-15
tien 3-41
Timer Basecount Registers 2-84
Timer Current Count Registers 2-84
Timer Destination Registers 2-86
Timer Frequency Register 2-83
Timer Vector/Priority Registers 2-85
timers 2-68
timing (DRAM access) 3-8, 3-9, 3-10
timing (ROM/Flash access) 3-11
transaction ordering 2-29
triple- (or greater) bit error 3-14
true, definition 1-2
trun 3-53
tsse 3-53

U

UCSR access mechanisms 4-8
Universe (VMEbus to PCI) chip 4-1
Universe as PCI master 4-6
Universe as PCI slave 4-5
Universe as VMEbus master 4-4
Universe as VMEbus slave 4-4
Universe chip problems after a PCI reset 4-14, 5-9

Universe PCI Register values for CHRP memory map 1-16
Universe PCI register values for PREP memory map 1-20
Universe PCI register values for VMEbus slave map example 1-25
Universe register map 4-9
Universe's involvement 5-15
upper/lower chip status bit 3-35

V

Vendor ID/ Device ID Registers 2-53
Vendor ID/Device ID Registers 2-33
Vendor Identification Register 2-81
Vendor/Device Register 3-33
VME Geographical Address Register (VGAR) 1-45
VME registers 1-40, 1-41
VMEbus domain 5-15
VMEbus interface 4-4
VMEbus interrupt handling 4-7
VMEbus mapping 1-21
VMEbus master map 1-21
VMEbus master mapping 1-22
VMEbus slave map 1-23
VMEbus slave map example 1-26
VMEbus slave mapping 1-24

W

W83C553 PIB registers 1-34
WE* 3-20
when MPC devices are big-endian 2-25
when MPC devices are little endian 2-26
word, definition 1-2
writing to the control registers 3-57

Z

Z8536 CIO port pins 1-46
Z8536 CIO port pins assignment 1-46